FL SWITCH 1924 - Industrial Ethernet Switch

2891057

https://www.phoenixcontact.com/us/products/2891057

Please be informed that the data shown in this PDF document is generated from our online catalog. Please find the complete data in the user documentation. Our general terms of use for downloads are valid.

CRA-READY

Ethernet switch, 24 Ethernet ports on the front in RJ45 format, automatic detection of 10, 100 or 1000 Mbps data transmission rate, coupling of network segments with different transmission speeds, auto crossing function, installs in 19-in. (482 mm) rack



Product description

Ethernet interface
The FL SWITCH 1924 has 24 Ethernet ports in RJ45 format. It is mounted in a 19-in. (482 mm) rack with AC power. The data transmission speed is 10 Mbps, 100 Mbps or 1000 Mbps. The switch also supports jumbo frames.
Each port has an auto crossing function. It is not necessary to make a distinction between 1:1 or crossover Ethernet cables. Mounting brackets and power cords for EEC (CEE 7/4) and North America (NEMA 5-15) are included. User supplies screws for bracket to rack connection.

Switching properties of FL SWITCH 1924
–Store-and-forward:
All data telegrams that are received by the switch have their validity checked. Invalid or faulty data packets (>9216 bytes or CRC errors) and fragments (<64 bytes) are rejected. Valid data telegrams are forwarded by the switch. The switch always forwards the data using the data transmission speed that is used in the destination network segment.
–Multi-address function:
The switch independently learns the addresses for termination devices, which are connected via a port, by evaluating the source addresses in the data telegrams. Only packets with unknown addresses, with a source address of this port or with a multicast/broadcast address in the destination address field are forwarded via the corresponding port. The switch can store up to 8192 MAC addresses in its address table.
–Quality of service (QoS): IEEE 802.1P/Q
The FL SWITCH 1924 switches are capable of reading Ethernet packets that have already been assigned a priority level by a managed switch. In case of heavy traffic, packets with a priority level between 4 and 7 are considered high priority and processed before packets with a priority level between 0 and 3 (2:1 ratio). After prioritization the packets are forwarded without modification.
–Grounding
The metal RJ45 socket housings are connected to earth/ground. For maximum noise immunity, shielded RJ45 connectors and cables should be used.

Your advantages

- Quality of service (QoS) support (2 queus)
- Jumbo frame support (frame size up to 9216 bytes/frame)
- Power supply range of 100 V AC ... 240 V AC at 50/60 Hz
- MAC address table size is 8192 (8k) entries
- Two power cords are included. For North America, a NEMA 5-15 3-pin plug (type A). For EEC, a CEE 7/4 (type F)



Commercial data

Item number	2891057
Packing unit	1 pc
Minimum order quantity	1 pc
Sales key	DN19
Product key	DNN115
GTIN	4046356763158
Weight per piece (including packing)	3,589.4 g
Weight per piece (excluding packing)	2,730 g
Customs tariff number	85176200
Country of origin	TW

Technical data

Dimensions

Width	482 mm
Height	44 mm
Depth	210 mm

Notes

Note on application	Only for industrial use
Note on application	As things stand now, we are preparing the product so that, as of December 11, 2027, it will comply with the requirements of the EU Cyber Resilience Act (CRA) based on the information currently available regarding the CRA.

Utilization restriction

EMC note	EMC: class A product, see manufacturer's declaration in the download area

Material specifications

Color (Housing)	black (RAL 9005)

Mounting

Mounting type	Rack mounting (with holder)
Holder system	19" rack

Interfaces

Ethernet

Connection method	RJ45
Transmission speed	10/100/1000 Mbps
Transmission physics	Twisted pair connection
Transmission length	100 m (per segment)
Signal LEDs	Activity, link status
No. of channels	24 (RJ45 ports)

Product properties

Product type	Switch
Product family	Unmanaged Switch 1900
Type	Stand-alone
MTTF	30.4 Years (MIL-HDBK-217F standard, temperature 25°C, operating cycle 100%)
Special properties	The product is being prepared for compliance with the Cyber Resilience Act (CRA)

Switch functions

MAC address table	8192
Status and diagnostic indicators	LEDs: U_S, link and activity per port

Basic functions	Unmanaged switch / auto negotiation, complies with IEEE 802.3, store and forward switching mode
Additional functions	Autonegotiation

Electrical properties

Local diagnostics	US Power present Green LED
Maximum power dissipation for nominal condition	88 W
Transmission medium	Copper

Supply

Supply voltage (AC)	120 V AC
	220 V AC
Supply voltage range	100 V AC ... 240 V AC (50/60 Hz)
Inrush current	23 A (200 µs @ 230 V AC)
Max. current consumption	0.4 A (maximum)
Typical current consumption	312 mA (100 V AC)

Supply: Module electronics

Supply voltage range	100 V AC ... 240 V AC
Current consumption	1 A (maximum)

Connection data

Connection method	RJ45

Environmental and real-life conditions

Ambient conditions

Degree of protection	IP20
Ambient temperature (operation)	0 °C ... 60 °C
Ambient temperature (storage/transport)	-25 °C ... 70 °C
Permissible humidity (operation)	5 % ... 95 % (non-condensing)
Air pressure (operation)	86 kPa ... 108 kPa (2000 m above mean sea level)

EMC data

Electromagnetic compatibility	Conformance with EMC directive 2004/108/EC and for low-voltage directive 2006/95/EC
Conformance with EMC directives	IEC 61000-6-2 EN 61000-4-2 (ESD) Criterion B
	EN 61000-4-3 (radiated noise immunity) Criterion A
	EN 61000-4-4 (EFT burst) Criterion B
	EN 61000-4-5 (surge) Criterion B
	EN 61000-4-6 (line noise immunity) Criterion A
	EN 61000-4-8 (electromagnetic fields) Criterion A
	EN 61000-4-11
	EN 61000-6-3
Noise immunity	EN 61000-6-2:2005

Noise emission

Standards/regulations	EN 61000-6-4

Signaling

Status display	LEDs: U_S, link and activity per port

Drawings

Application drawing

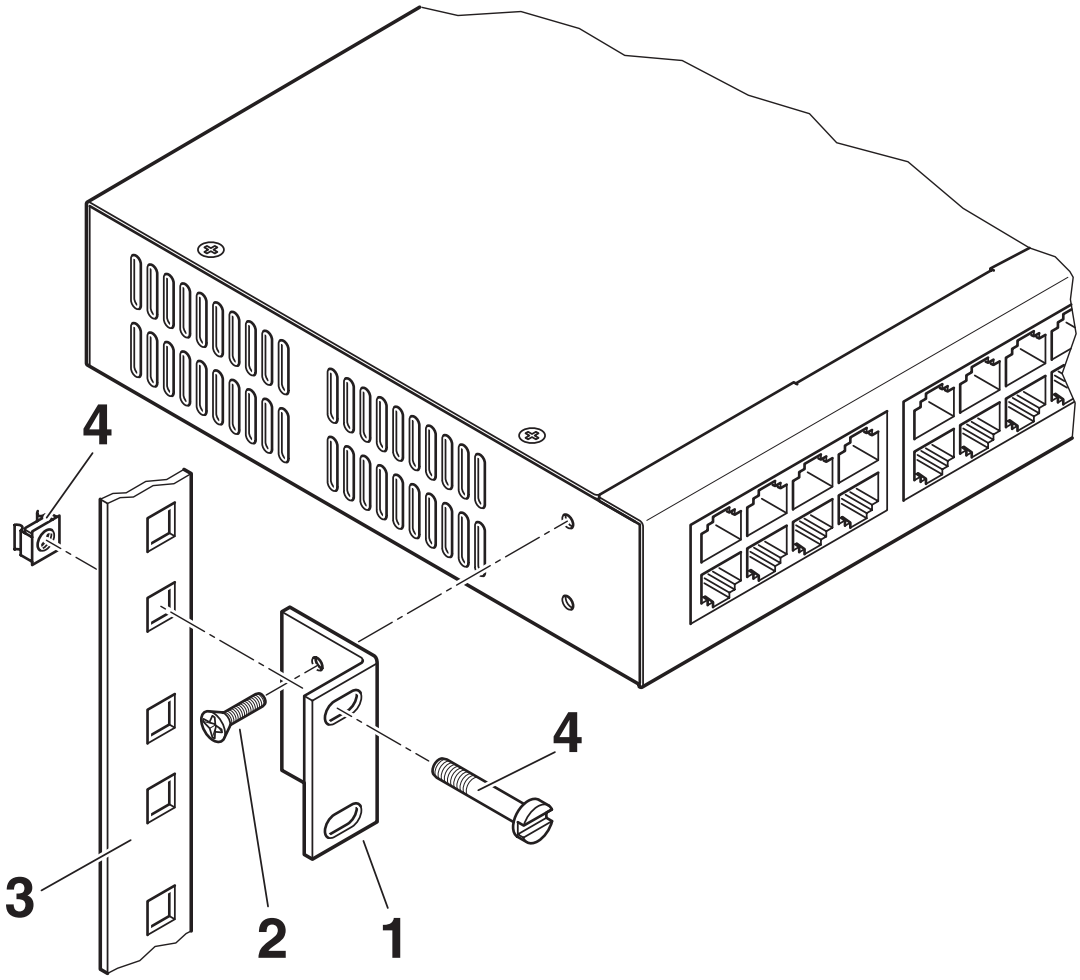

Attach the brackets to each side of the switch with the included screws (as shown).

Install the switch in the rack using the rack hardware.

Schematic diagram

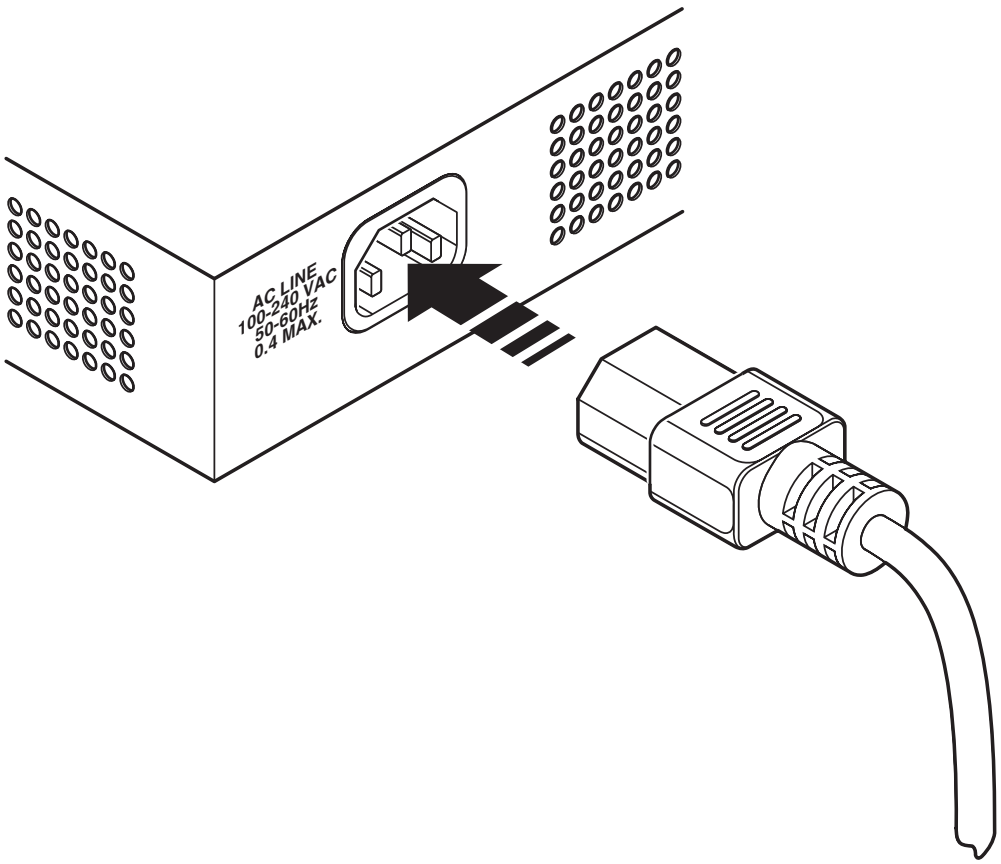

Two power cords are included and provide line, neutral and ground conductors:
For North American markets the power cord uses a NEMA 5-15 plug.
For European markets the power cord uses a CEE 7/4 plug.
Both power cords use a common plug (IEC 60320-1 type C13) for connecting to the FL SWITCH 1924.

Schematic diagram

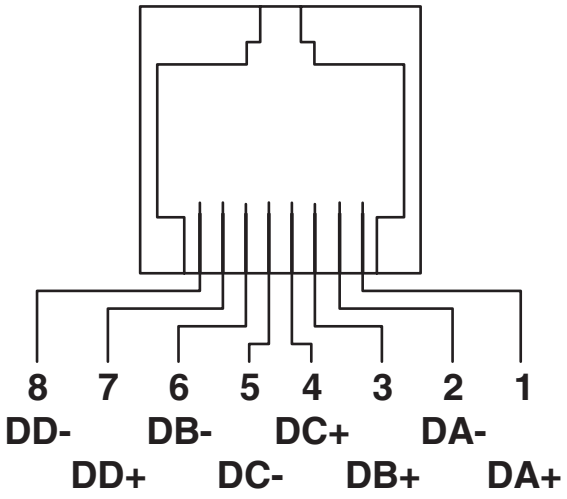

RJ45 pinout for 1000 Mbps

Schematic diagram

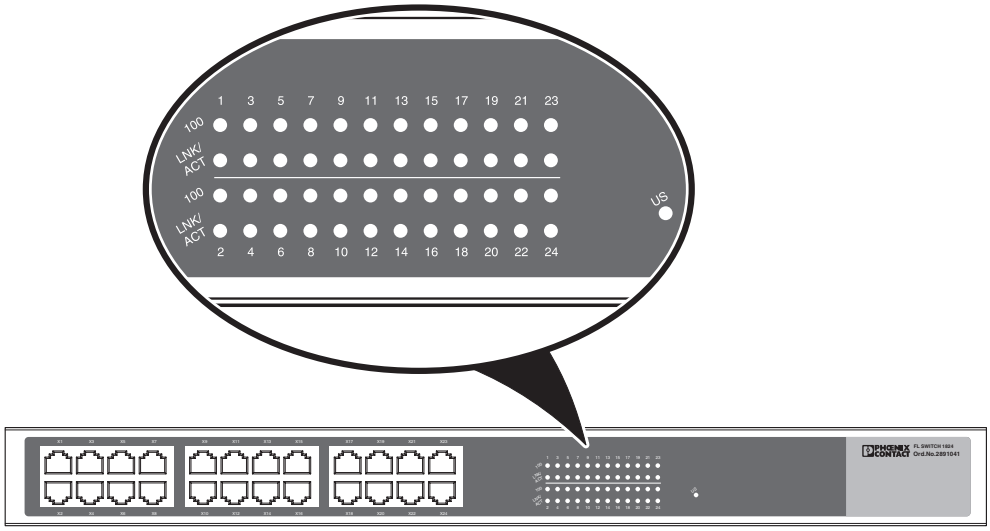

The US LED indicates power is present.

Each port has 2 LEDs:
- When the 100 LED is illuminated, the port is operating at 100 Mbps. When off, it is operating at 10 Mbps.
- The LNK/ACT LED is illuminated when the port is connected and off when not connected. Flashing indicates data transfer (RX or TX).

Approvals

To download certificates, visit the product detail page: https://www.phoenixcontact.com/us/products/2891057

cULus Listed
Approval ID: US-UL-2338994-2

IECEE CB Scheme
Approval ID: DK-104833-UL

KC
Approval ID: MSIP-REI-PCK-2891057

cULus Listed
Approval ID: E140403-20180208

Classifications

ECLASS

ECLASS-13.0	19170402
ECLASS-15.0	19170402

ETIM

ETIM 10.0	EC000734

UNSPSC

UNSPSC 21.0	43222600

Environmental product compliance

EU RoHS

Fulfills EU RoHS substance requirements	Yes
Exemption	6(c), 7(a), 7(c)-I

China RoHS

Environment friendly use period (EFUP)	EFUP-10
	An article-related China RoHS declaration table can be found in the download area for the respective article under "Manufacturer declaration". For all articles with EFUP-E, no China RoHS declaration table issued and required.

EU REACH SVHC

REACH candidate substance (CAS No.)	Lead(CAS: 7439-92-1)

Phoenix Contact 2026 © - all rights reserved
https://www.phoenixcontact.com

Phoenix Contact USA
586 Fulling Mill Road
Middletown, PA 17057, United States
(+717) 944-1300
info@phoenixcon.com