# DT-LAN-CAT.6+ - Surge protection device

2881007

https://www.phoenixcontact.com/us/products/2881007

Please be informed that the data shown in this PDF document is generated from our online catalog. Please find the complete data in the user documentation. Our general terms of use for downloads are valid.



Surge protection in accordance with Class $E_A$ ($CAT6_A$), for Gigabit Ethernet (up to 10 Gbps), token ring, FDDI/CDDI, ISDN, and DS1. Suitable for Power over Ethernet (PoE++ / 4PPoE) “Mode A” and “Mode B”. RJ45 attachment plug with separate grounding cable and ground connection snap-on foot for NS 35 DIN rails.

## Your advantages

- Can be used in applications up to 10 Gbps with adapted protective circuit
- High power transmission with PoE++ / 4PPoE support
- Easy network integration via RJ45 jacks
- Can be installed in a control cabinet by removing the ground connection adapter
- Suitable for category 6 high-speed data networks

## Commercial data

| | |
|---|---|
| Item number | 2881007 |
| Packing unit | 1 pc |
| Minimum order quantity | 1 pc |
| Sales key | CL24 |
| Product key | CL3112 |
| GTIN | 4046356151900 |
| Weight per piece (including packing) | 316 g |
| Weight per piece (excluding packing) | 314.1 g |
| Customs tariff number | 85363010 |
| Country of origin | DE |

## Technical data

### Product properties

| | |
|---|---|
| Product type | Surge protection for information technology |
| Product family | DATATRAB |
| IEC test classification | B2 |
| | C1 |
| | C2 |
| | C3 |
| | D1 |
| Type | Attachment plug for DIN rail mounting |
| Number of positions | 8 |
| Surge protection fault message | none |
| Wire pairs per module | 4 |

Insulation characteristics

| | |
|---|---|
| Overvoltage category | II |
| Pollution degree | 2 |

### Connection data

| | |
|---|---|
| Connection method | RJ45 |

### Dimensions

| | |
|---|---|
| Dimensional drawing | 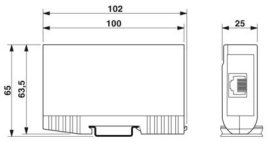  |
| Width | 25 mm |
| Height | 102 mm |
| Depth | 63.5 mm |

### Material specifications

| | |
|---|---|
| Color | silver-colored |
| Housing material | Die-cast zinc |

### Mechanical properties

Mechanical data

| | |
|---|---|
| Open side panel | No |

### Protective circuit

| | |
|---|---|
| Direction of action | Line-Line & Line-Ground/Shield |

| | |
|---|---|
| Maximum continuous voltage $U_C$ (line-line) | ≤ 3.3 V DC (±60 V DC/PoE+) |
| Rated current | ≤ 1.5 A (25 °C) |
| Operating effective current $I_C$ at $U_C$ | ≤ 1 µA |
| Protective conductor current $I_{PE}$ | ≤ 400 µA |
| Nominal discharge current $I_n$ (8/20) µs (line-line) | 100 A |
| Nominal discharge current $I_n$ (8/20) µs (line-ground) | 2 kA (per signal pair) |
| Pulse discharge current $I_{imp}$ (10/350) µs (line-earth) | 1 kA |
| Total discharge current $I_{Total}$ (8/20) µs | 10 kA |
| Nominal pulse current Ian (10/700) µs (line-line) | ≤ 40 A |
| Nominal pulse current Ian (10/700) µs (line-earth) | ≤ 160 A |
| Output voltage limitation at 1 kV/µs (line-line) spike | ≤ 85 V (PoE) |
| Output voltage limitation at 1 kV/µs (line-earth) spike | ≤ 700 V |
| Output voltage limitation at 1 kV/µs (line-line) static | ≤ 9 V |
| Output voltage limitation at 1 kV/µs (line-earth) static | ≤ 700 V |
| Residual voltage at $I_n$ (conductor-conductor) | ≤ 15 V |
| | ≤ 100 V (PoE) |
| Voltage protection level $U_p$ (line-line) | ≤ 9 V (B2 - 1 kV / 25 A) |
| | ≤ 100 V (B2 - 1 kV / 25 A - PoE) |
| | ≤ 12 V (C3 - 20 A) |
| Voltage protection level $U_p$ (line-earth) | ≤ 900 V (B2 - 4 kV / 100 A) |
| | ≤ 700 V (C2 - 4 kV / 2 kA) |
| | ≤ 1 kV (C3 - 80 A) |
| Response time $t_A$ (line-line) | ≤ 1 ns |
| Response time $t_A$ (line-earth) | ≤ 100 ns |
| Input attenuation aE, sym. | ≤ 1 dB (up to 100 MHz/direct measuring) |
| | ≤ 1 dB (up to 250 MHz/direct measuring) |
| | ≤ 3 dB (up to 500 MHz/direct measuring) |
| Near-end crosstalk attenuation | ≥ 35 dB (250 MHz/100 Ω/link) |
| | ≥ 45 dB (100 MHz / 100 Ω / Link) |
| | ≥ 27 dB (500 MHz / 100 Ω / Link) |
| | ≥ 39 dB (250 MHz/100 Ω/direct measuring) |
| Capacity (Core-Core) | typ. 12 pF (f= 1 MHz / VR= 0 V) |
| Capacity (Core-Earth) | typ. 2 pF (f= 1 MHz / VR= 0 V) |
| Surge protection fault message | none |
| Impulse durability (line-line) | B2 - 1 kV / 25 A |
| | C3 - 20 A |
| Impulse durability (line-earth) | B2 - 4 kV / 100 A |
| | C2 - 4 kV / 2 kA |
| | C3 - 80 A |
| | D1 - 1 kA |

## Environmental and real-life conditions

### Ambient conditions

| | |
|---|---|
| Degree of protection | IP20 |
| Ambient temperature (operation) | -40 °C ... 70 °C |
| Ambient temperature (storage/transport) | -40 °C ... 70 °C |
| Altitude | ≤ 4000 m (amsl) |
| Permissible humidity (operation) | 5 % ... 85 % |

## Standards and regulations

| | |
|---|---|
| Standards/specifications | IEC 61643-21 |
| Note | 2002 |
| Standards/specifications | EN 50173-1 |
| Note | 2002 |
| Standards/specifications | ISO/IEC 11801-Am.1 |
| Note | 2006 |

## Mounting

| | |
|---|---|
| Mounting type | Connection-specific attachment plug and DIN rail, 35 mm |

## Drawings

Dimensional drawing

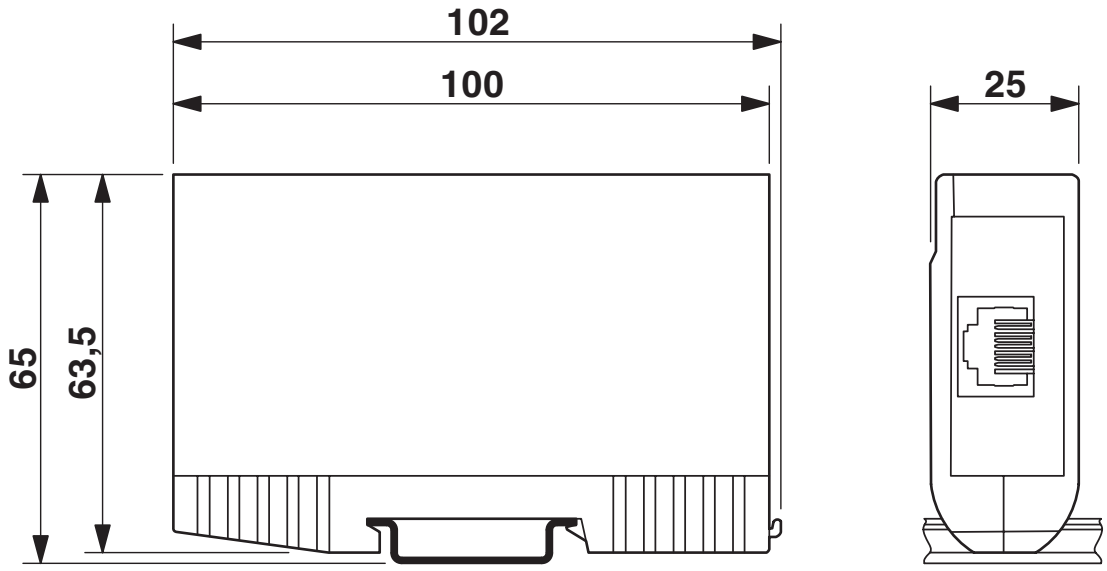


Application drawing

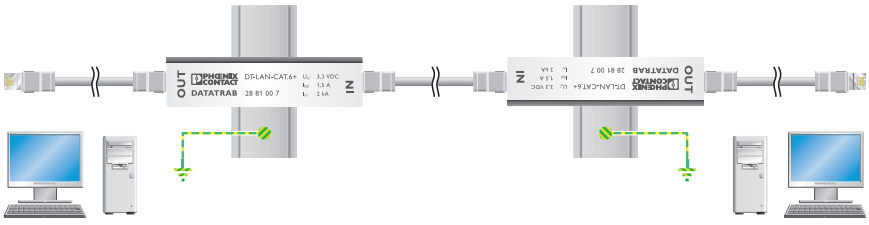

Circuit diagram

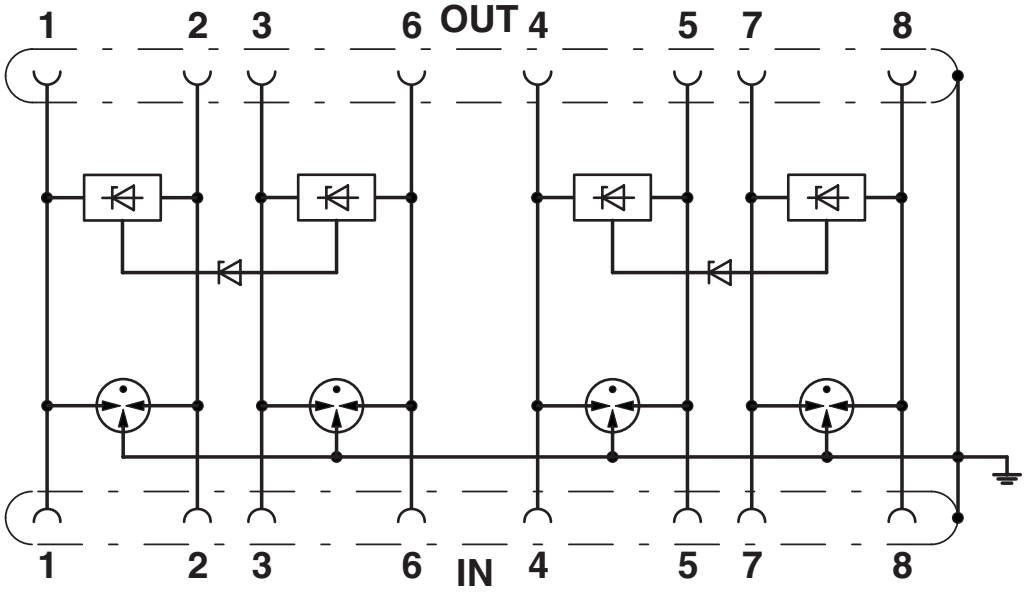

## Approvals

To download certificates, visit the product detail page: https://www.phoenixcontact.com/us/products/2881007

**UL Listed**
Approval ID: FILE E 138168

**UAE-RoHS**
Approval ID: 23-10-88352

## Classifications

### ECLASS

| | |
|---|---|
| ECLASS-13.0 | 27171503 |
| ECLASS-15.0 | 27171503 |

### ETIM

| | |
|---|---|
| ETIM 10.0 | EC001466 |

### UNSPSC

| | |
|---|---|
| UNSPSC 21.0 | 39121600 |

## Environmental product compliance

EU RoHS

| | |
|---|---|
| Fulfills EU RoHS substance requirements | Yes |
| Exemption | 6(a), 6(a)-I, 7(a), 7(c)-I |

China RoHS

| | |
|---|---|
| Environment friendly use period (EFUP) | EFUP-50 |
| | An article-related China RoHS declaration table can be found in the download area for the respective article under "Manufacturer declaration". For all articles with EFUP-E, no China RoHS declaration table issued and required. |

EU REACH SVHC

| | |
|---|---|
| REACH candidate substance (CAS No.) | Lead(CAS: 7439-92-1) |
| SCIP | 0151641f-8d9c-4558-8f99-5ef76a28eeb6 |

EF3.1 Climate Change

| | |
|---|---|
| CO2e kg | 6.529 kg CO2e |


Phoenix Contact 2026 © - all rights reserved
https://www.phoenixcontact.com



Phoenix Contact USA
586 Fulling Mill Road
Middletown, PA 17057, United States
(+717) 944-1300
info@phoenixcon.com