IB IL SGI 2/F-PAC - Analog module

2878638

https://www.phoenixcontact.com/us/products/2878638

Please be informed that the data shown in this PDF document is generated from our online catalog. Please find the complete data in the user documentation. Our general terms of use for downloads are valid.

CRA-READY



Inline, Strain gauge measurement terminal, transmission speed in the local bus: 500 kbps, 2 fast inputs, 4-, 6-conductor connection technology, degree of protection: IP20, including Inline connectors and marking fields; The product is being prepared for compliance with the Cyber Resilience Act (CRA).

Product description

The terminal is designed for use within an Inline station. This terminal is a fast input module used to connect load cells, force transducers, mass pressure transducers, and similar devices based on strain gauges. The strain gauges can be connected using 6- or 4-conductor technology. The strain gauge output signals are measured in each bus cycle and updated in the process data (bus-synchronous process data update). The terminal is suitable for control applications with increased speed requirements. There are two options for data exchange: - via process data (both inputs in one bus cycle) - via PCP Compact (both inputs in the “Analog Values” PCP object) The measured values are represented by standardized 16-bit values.

Your advantages

- 2 fast inputs for strain gauge
- Connection of strain gauges in 6- and 4-conductor technology
- Sensor supply voltage provided by the terminal, no external power supply required
- Communication either via process data or parameter channel (PCP Compact)
- The channels are parameterized independently of one another via the bus system
- Bus-synchronous process data update

ELEKTROGERÄTE RÜCKNAHME

Commercial data

Item number	2878638
Packing unit	1 pc
Minimum order quantity	1 pc
Sales key	DR01
Product key	DRI144
GTIN	4017918996406
Weight per piece (including packing)	230 g
Weight per piece (excluding packing)	190 g
Customs tariff number	85389091
Country of origin	DE

Technical data

Dimensions

Dimensional drawing	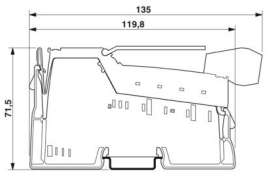
Width	48.8 mm
Height	136 mm
Depth	71.5 mm
Note on dimensions	Housing dimensions

Notes

Note on application	Only for industrial use
Note on application	As things stand now, we are preparing the product so that, as of December 11, 2027, it will comply with the requirements of the EU Cyber Resilience Act (CRA) based on the information currently available regarding the CRA.

Utilization restriction

CCCex note	Use in potentially explosive areas is not permitted in China.

Mounting

Mounting type	DIN rail mounting

Material specifications

Color (Housing)	green (RAL 6021)

Interfaces

Inline local bus

Number of interfaces	2
Connection method	Inline data jumper
Transmission speed	500 kbps
Transmission physics	Copper

System properties

Programming data

Length code (hex)	03
ID code (dec.)	223
Length code (dec)	03
Process data channel	48 bit
Input address area	6 Byte

Output address area	6 Byte
Parameter channel (PCP)	2 Byte
Register length (bus)	64 bit

Fieldbus data telegram (PROFIBUS)

Required parameter data	15 Byte
Required configuration data	5 Byte

Input data

Analog

Description of the input	Input channels for strain gauge
Number of inputs	2
Connection technology	6 or 4-wire, twisted pair shielded cable
Bridge difference U_d	Measuring range specified by selecting the characteristic and the bridge voltage
Bridge voltage U_0	3.3 V
	5 V
Measured value representation	15 bit + sign bit
Characteristics	±1 mV/V, ±2 mV/V, ±3 mV/V, ±4 mV/V
	+1 mV/V, +2 mV/V, +3 mV/V, +4 mV/V

Output data

Analog

Output description	Voltage output
Number of outputs	2
Impedance	> 58.3 Ω (typical; permissible total resistance of the strain gauge)
Output voltage	5 V
	3.3 V
Output current	typ. 55 mA (with U_V = 3.3 V)
	typ. 85 mA (with U_V = 5 V)

Product properties

Product type	I/O component
Product family	Inline
Type	modular
Scope of supply	including Inline connectors and marking fields
Operating mode	Process data operation with 3 words, PCP with 1 word
Special properties	The product is being prepared for compliance with the Cyber Resilience Act (CRA)
	2 fast inputs
	4-, 6-conductor connection technology
Diagnostics messages	Failure of the power supply at U_{ANA} Error message in the process data
	Failure of or insufficient communications power U_L I/O error message sent to the bus coupler

	I/O error Error message in the process data

Insulation characteristics

Overvoltage category	II (IEC 60664-1, EN 60664-1)
Pollution degree	2 (IEC 60664-1, EN 60664-1)

Electrical properties

Maximum power dissipation for nominal condition	1.05 W

Potentials: Communications power (U_L)

Supply voltage	7.5 V DC (via voltage jumper)
Current draw	max. 85 mA
	typ. 75 mA

Potentials: Supply of analog modules (U_{ANA})

Supply voltage	24 V DC (via voltage jumper)
Supply voltage range	19.2 V DC ... 30 V DC (including all tolerances, including ripple)
Current draw	typ. 32 mA (with maximum load of 58.3 Ω when U_V = 5 V)
	typ. 8 mA (without strain gauge)

Electrical isolation/isolation of the voltage ranges

Test voltage: Logic/analog I/O (digital isolator)	500 V AC, 50 Hz, 1 min
Test voltage: Functional ground/analog I/O (isolating distance)	500 V AC, 50 Hz, 1 min
Test voltage: Logic/functional ground (isolating distance)	500 V AC, 50 Hz, 1 min

Connection data

Connection technology

Connection name	Inline connector

Inline connector

Connection method	Spring-cage connection
Conductor cross-section, rigid	0.08 mm² ... 1.5 mm²
Conductor cross-section, flexible	0.08 mm² ... 1.5 mm²
Conductor cross-section AWG	28 ... 16
Stripping length	8 mm

Environmental and real-life conditions

Ambient conditions

Ambient temperature (operation)	-25 °C ... 55 °C
Degree of protection	IP20
Air pressure (operation)	70 kPa ... 106 kPa (up to 3000 m above sea level)
Air pressure (storage/transport)	70 kPa ... 106 kPa (up to 3000 m above sea level)
Ambient temperature (storage/transport)	-25 °C ... 85 °C
Permissible humidity (operation)	10 % ... 95 % (non-condensing)
Permissible humidity (storage/transport)	10 % ... 95 % (non-condensing)

Mechanical test

Vibration resistance in accordance with EN 60068-2-6/IEC 60068-2-6	5g
Shock in accordance with EN 60068-2-27/IEC 60068-2-27	25g

Standards and regulations

Protection class	III (IEC 61140, EN 61140, VDE 0140-1)

Drawings

Dimensional drawing

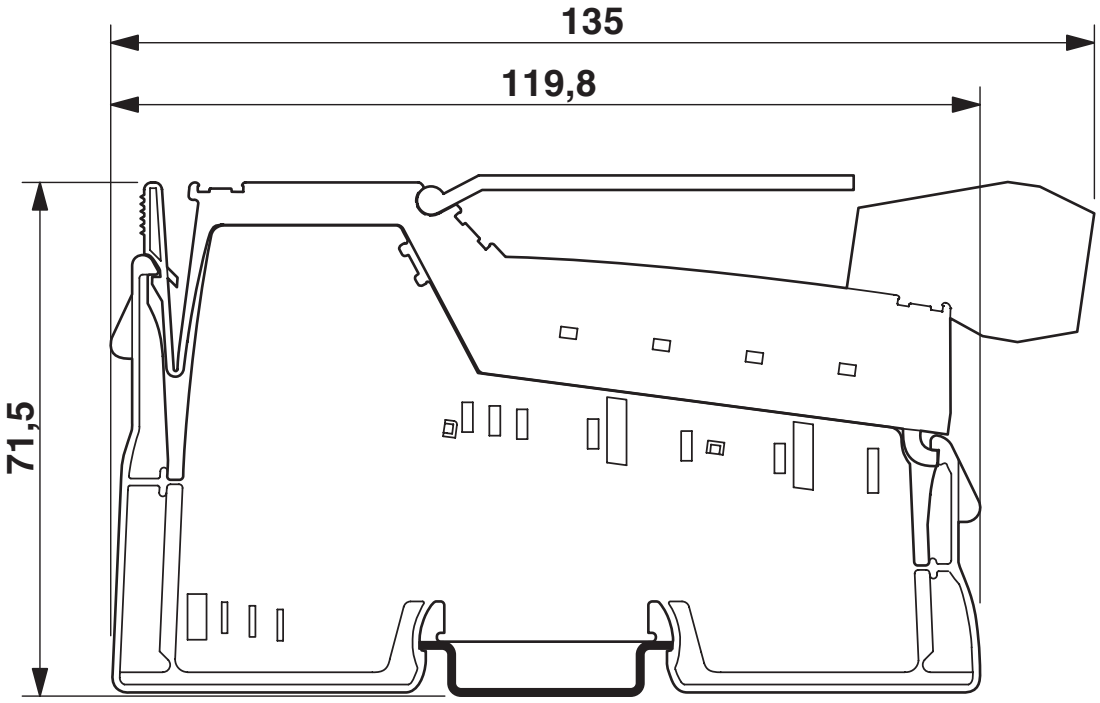

Dimensions (in mm)

Connection diagram

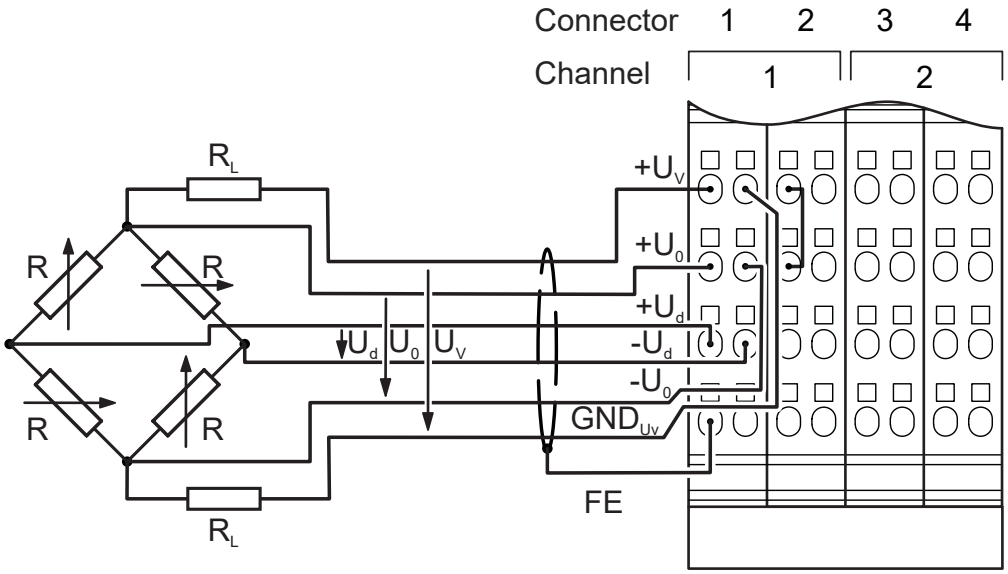

Connection example

Block diagram

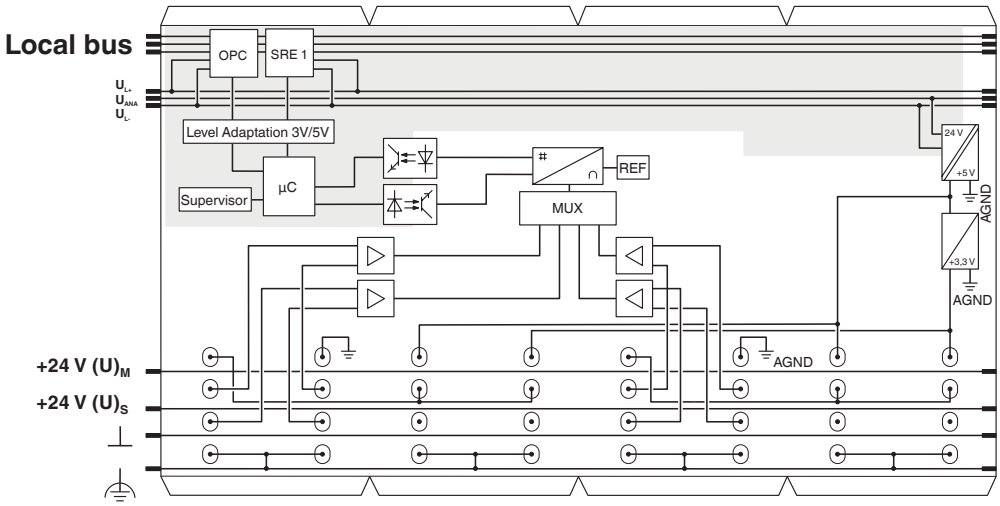

Internal wiring of the terminal points

Approvals

To download certificates, visit the product detail page: https://www.phoenixcontact.com/us/products/2878638

cULus Recognized
Approval ID: E140324

cULus Listed
Approval ID: E199827

Classifications

ECLASS

ECLASS-13.0	27242601
ECLASS-15.0	27242601

ETIM

ETIM 10.0	EC001596

UNSPSC

UNSPSC 21.0	32151600

Environmental product compliance

EU RoHS

Fulfills EU RoHS substance requirements	Yes
Exemption	7(a), 7(c)-I

China RoHS

Environment friendly use period (EFUP)	EFUP-50
	An article-related China RoHS declaration table can be found in the download area for the respective article under "Manufacturer declaration". For all articles with EFUP-E, no China RoHS declaration table issued and required.

EU REACH SVHC

REACH candidate substance (CAS No.)	Lead(CAS: 7439-92-1)
SCIP	4ae0bc01-d8c7-40f2-8b69-295c45627de4

Phoenix Contact 2026 © - all rights reserved
https://www.phoenixcontact.com

Phoenix Contact USA
586 Fulling Mill Road
Middletown, PA 17057, United States
(+717) 944-1300
info@phoenixcon.com