RAD-ADP-N/F-N/F - Adapter

2867843

https://www.phoenixcontact.com/us/products/2867843

Please be informed that the data shown in this PDF document is generated from our online catalog. Please find the complete data in the user documentation. Our general terms of use for downloads are valid.



Antenna adapter for control cabinet feed-through, frequency range: 0.3 GHz ... 6 GHz, degree of protection: IP65, connection: 2 x N (female)

Your advantages

- Space-saving, thanks to the compact design
- Easy installation with system-conforming connection technology
- For adapting between antenna cables
- For control cabinet feed-through

Commercial data

Item number	2867843
Packing unit	1 pc
Minimum order quantity	1 pc
Sales key	DN23
Product key	DNN2Z1
GTIN	4046356046923
Weight per piece (including packing)	48 g
Weight per piece (excluding packing)	48.31 g
Customs tariff number	85366910
Country of origin	CN

Technical data

Notes

Note on application

Note on application	Only for industrial use

Product properties

Product type	Coaxial adapter

Electrical properties

Frequency range	0.3 GHz ... 6 GHz
Impedance	50 Ω

Connection data

Connection method	N (female)

Dimensions

Dimensional drawing	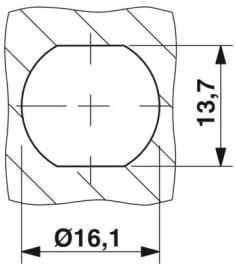
Width	38 mm
Diameter	16.5 mm
Hole diameter	16.1 mm

Material specifications

Color	white aluminium (RAL 9006)
Housing material	Brass (CuZn)

Environmental and real-life conditions

Ambient conditions

Degree of protection	IP65 (when installed)
Ambient temperature (operation)	-65 °C ... 165 °C
Ambient temperature (storage/transport)	-65 °C ... 165 °C

Mounting

Assembly note	Outdoors and indoors
	Connection-specific attachment plug

Drawings

Dimensional drawing

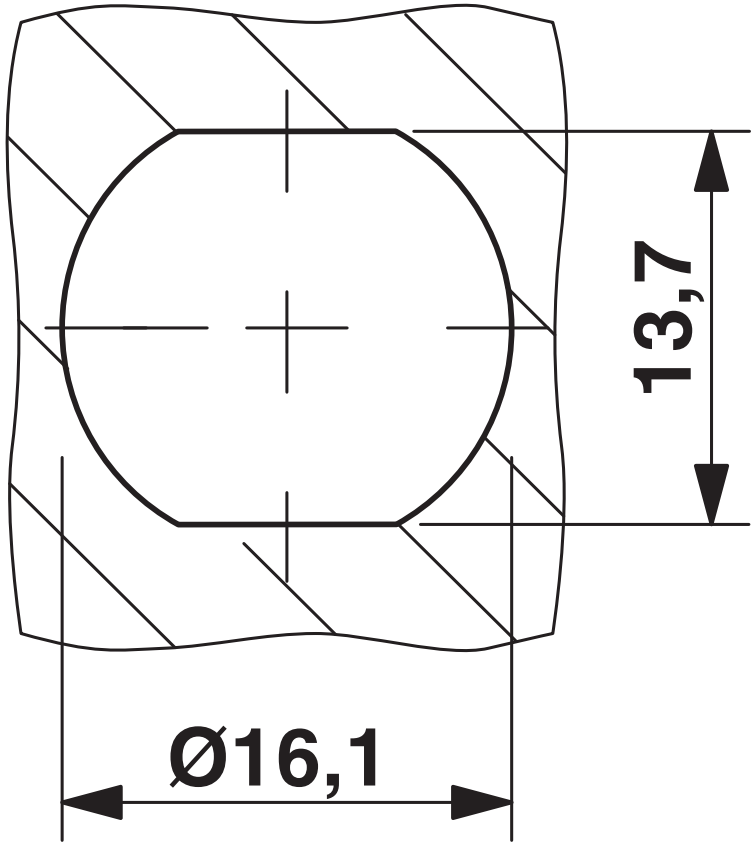

Drill holes

Classifications

ECLASS

ECLASS-13.0	19070417
ECLASS-15.0	19070417

ETIM

ETIM 10.0	EC001135

UNSPSC

UNSPSC 21.0	39121400

Environmental product compliance

EU RoHS

Fulfills EU RoHS substance requirements	Yes
Exemption	6(c)

China RoHS

Environment friendly use period (EFUP)	EFUP-E
	No hazardous substances above the limits

EU REACH SVHC

REACH candidate substance (CAS No.)	Lead(CAS: 7439-92-1)
SCIP	0fb381eb-78b8-48aa-b33d-4f60d783578f

EF3.1 Climate Change

CO2e kg	1.764 kg CO2e

Phoenix Contact 2026 © - all rights reserved
https://www.phoenixcontact.com

Phoenix Contact USA
586 Fulling Mill Road
Middletown, PA 17057, United States
(+717) 944-1300
info@phoenixcon.com