RAD-ISM-2400-ANT-OMNI-9-0 - Antenna

2867623

https://www.phoenixcontact.com/us/products/2867623

Please be informed that the data shown in this PDF document is generated from our online catalog. Please find the complete data in the user documentation. Our general terms of use for downloads are valid.



Omnidirectional antenna, 2.4 GHz, gain: 9 dBi, polarization: linear, opening angle: h/v 360°/15°, degree of protection: IP65, connection: N (female), incl. mounting bracket and mast clips

Your advantages

- For medium distances
- For freely mobile applications
- For multipoint or mesh connections

Commercial data

Item number	2867623
Packing unit	1 pc
Minimum order quantity	1 pc
Sales key	DN23
Product key	DNN2Z1
GTIN	4017918939007
Weight per piece (including packing)	850 g
Weight per piece (excluding packing)	853 g
Customs tariff number	85177100
Country of origin	PL

Technical data

Notes

Note on application

Note on application	Only for industrial use

Product properties

Product type	Antenna
Gain	9 dBi
Vertical beamwidth	15 °
Horizontal beamwidth	360 °
Polarization	Linear vertical

Electrical properties

Frequency band	2.4 GHz
Frequency range	2.4 GHz ... 2.5 GHz
Impedance	50 Ω
Voltage standing wave ratio VSWR in a 50 Ω system	≤ 2.00

Connection data

Connection technology

Connection method	N (female)
Outside diameter	28 mm ... 47 mm (Mast)

Dimensions

Width	25 mm
Height	625 mm

External dimensions

Outside diameter	28 mm ... 47 mm (Mast)

Material specifications

Color	gray white (RAL 9002)
Material	Fiberglass-reinforced plastic
	Aluminum
	V2A

Cable/line

Connecting cable	no

Environmental and real-life conditions

Ambient conditions

Degree of protection	IP65

Ambient temperature (operation)	-40 °C ... 75 °C
Ambient temperature (storage/transport)	-40 °C ... 75 °C

Mounting

Mounting type	Panel mounting
	Mast mounting

Drawings

Schematic diagram

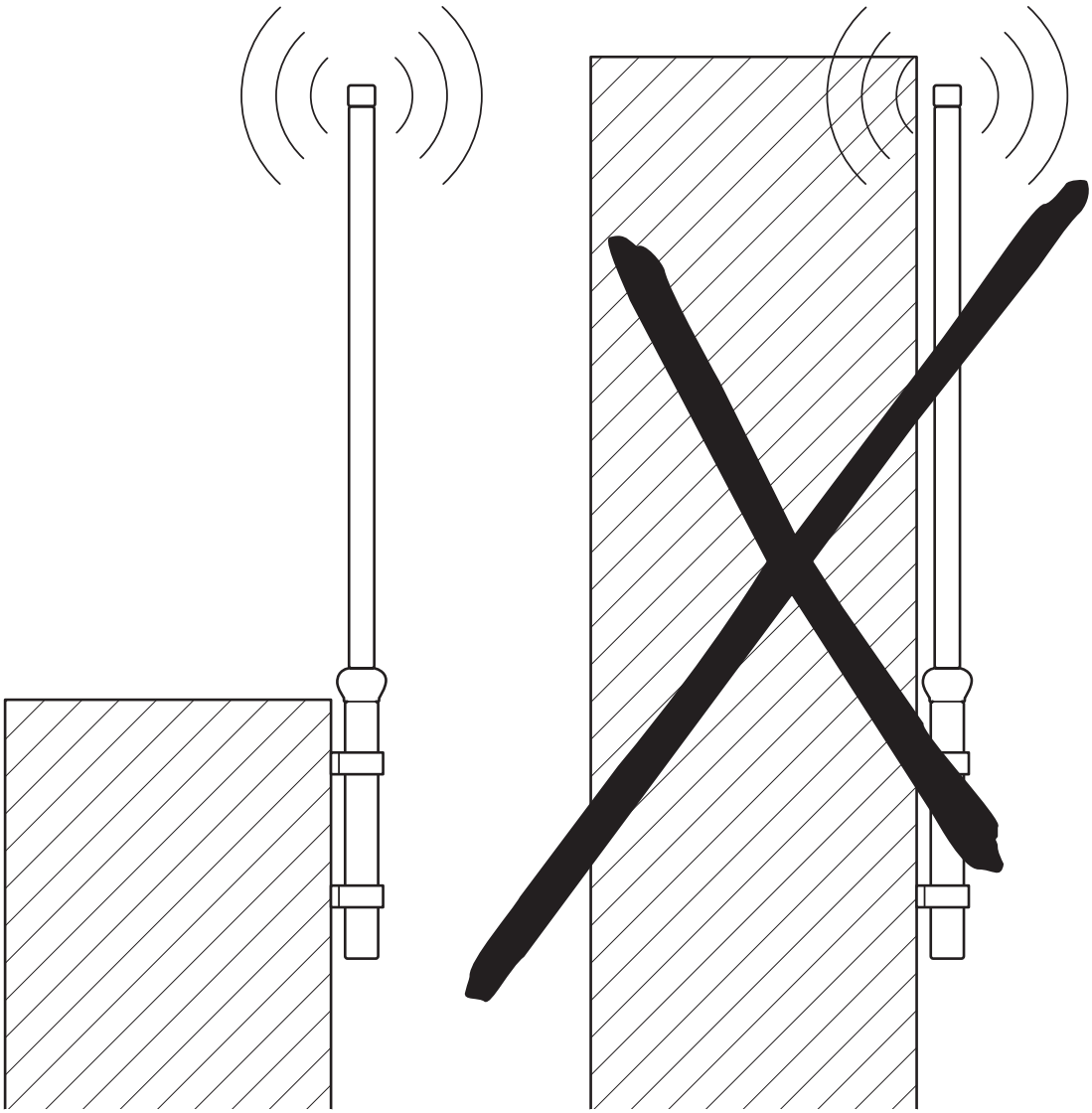

Mounting

Schematic diagram

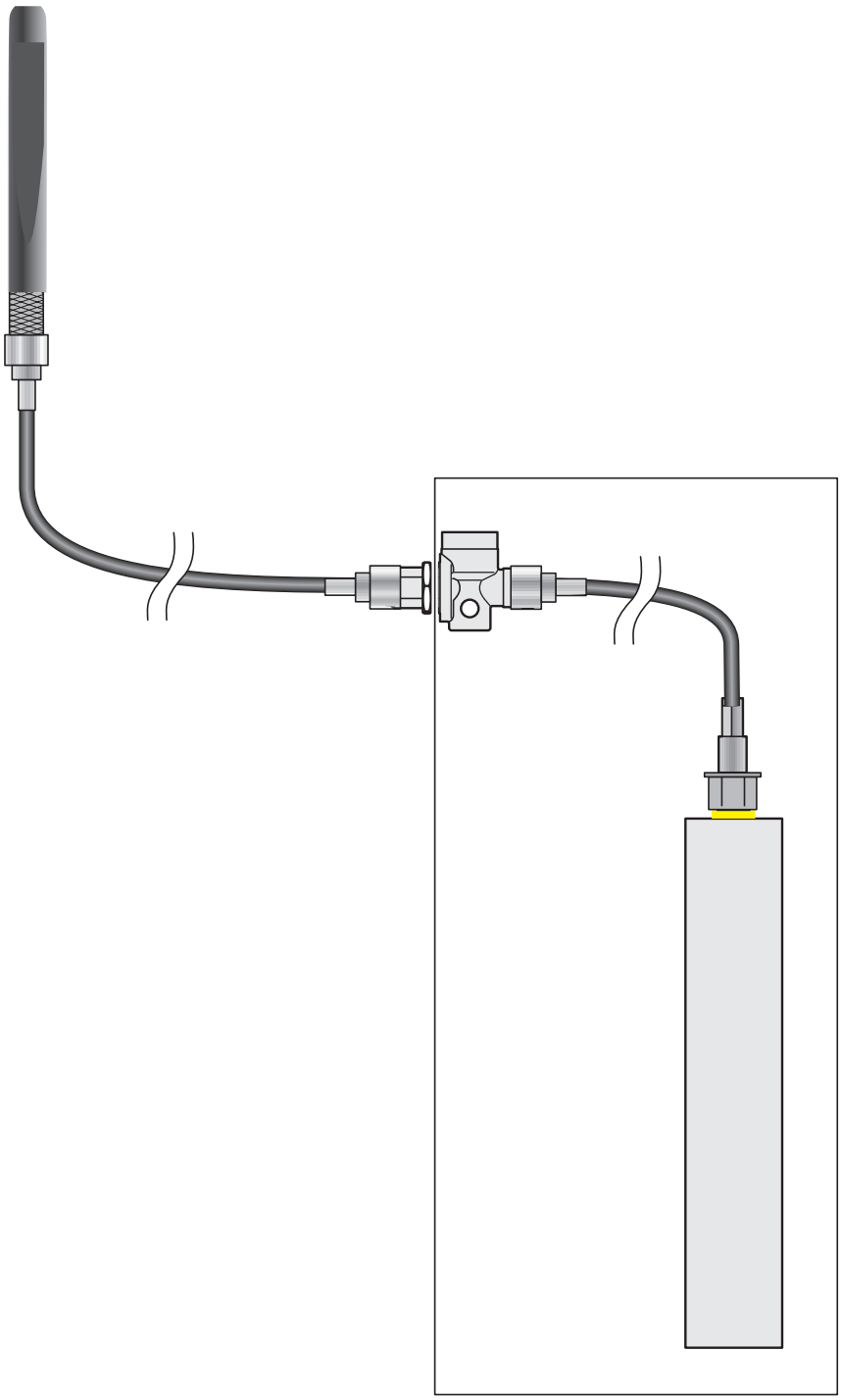

Installation example

Classifications

ECLASS

ECLASS-13.0	19070105
ECLASS-15.0	19070105

ETIM

ETIM 10.0	EC001698

UNSPSC

UNSPSC 21.0	43223100

Environmental product compliance

EU RoHS

Fulfills EU RoHS substance requirements	Yes
Exemption	6(c)

China RoHS

Environment friendly use period (EFUP)	EFUP-25
	An article-related China RoHS declaration table can be found in the download area for the respective article under "Manufacturer declaration". For all articles with EFUP-E, no China RoHS declaration table issued and required.

EU REACH SVHC

REACH candidate substance (CAS No.)	Lead(CAS: 7439-92-1)
SCIP	b4195123-53aa-4899-9f5d-bba4882d8f88

EF3.1 Climate Change

CO2e kg	16.349 kg CO2e

Phoenix Contact 2026 © - all rights reserved
https://www.phoenixcontact.com

Phoenix Contact USA
586 Fulling Mill Road
Middletown, PA 17057, United States
(+717) 944-1300
info@phoenixcon.com