MACX MCR-EX-SL-SD-21-60-LP - Solenoid driver

2865515

https://www.phoenixcontact.com/us/products/2865515

Please be informed that the data shown in this PDF document is generated from our online catalog. Please find the complete data in the user documentation. Our general terms of use for downloads are valid.



Ex i solenoid driver. For the intrinsically safe control of Ex i solenoid valves, alarm modules or LEDs installed in the Ex area. Current limitation at 58 mA. For gases up to Group IIB, loop-powered, electrical isolation, SIL 3. Screw connection.

Your advantages

- Mechanically compatible with the DIN rail connector
- Various output characteristic curves compatible with standard solenoid valves
- Loop-powered: the required power is supplied via the control signal on the input side.
- Installation in zone 2, protection type "n" (EN 60079-15) permitted
- Up to SIL 3 in accordance with IEC 61508
- 2-way electrical isolation
- Input: 19.2 V DC … 30 V DC
- Output [Ex ia] IIB

Commercial data

Item number	2865515
Packing unit	1 pc
Minimum order quantity	1 pc
Sales key	C430
Product key	DK1214
GTIN	4046356160575
Weight per piece (including packing)	163.9 g
Weight per piece (excluding packing)	120.8 g
Customs tariff number	85437090
Country of origin	DE

Technical data

Product properties

Product type	Solenoid driver
Product family	MACX Analog
No. of channels	1
Compatible valve	ASCO Coil 302 (12 V)
	ASCO Coil 302 (24 V)
	Bürkert Coil AC 10 standard
	Bürkert Coil AC 10 high resistance
	FESTO Coil MFH-...IA-SA-EX GBXE022AIAD03
	FESTO Coil (J)MFH-...BIA-SA-EX GBXE022AIAD03
	Norgren Herion Coil 2050
	Norgren Herion Coil 2051
	Norgren Herion Coil 2052
	Norgren Herion Coil 2053
	Parker Coil VZ95 482160.01 EEx ia IIB T6
Note	This is an extract of possible combinations of valves and solenoid drivers.

Electrical properties

Electrical isolation	2-way isolation
Electrical isolation between input and output	yes
Maximum temperature coefficient	0.01 %/K

Electrical isolation

Test voltage	2.5 kV AC (50 Hz, 60 s)
Overvoltage category	II
Pollution degree	2

Electrical isolation Output/input IEC/EN 60079-11

Standards/regulations	IEC/EN 60079-11
Rated insulation voltage	375 V_{PP}

Electrical isolation Output/input IEC/EN 61010-1

Standards/regulations	IEC/EN 61010-1
Rated insulation voltage	300 V_{rms}
Insulation	Safe isolation

Supply

Supply voltage range	loop-powered, no external supply necessary
Power dissipation	< 1.325 W

Input data

Signal: Voltage

Number of inputs	1
Voltage input signal	19.2 V DC ... 30 V DC (24 V DC, -20 % ... +25 %)
Max. current input signal	95 mA (U_e = 24 V DC)

Output data

Signal: Voltage

Output description	intrinsically safe
Number of outputs	1
Output voltage	≥ 12.9 V DC (58 mA)
Current limitation	> 58 mA
Response time	< 20 ms
Open-circuit voltage	> 21.9 V DC
Short-circuit-proof	yes

Connection data

Connection method	Screw connection
Stripping length	7 mm
Screw thread	M3
Conductor cross-section rigid	0.2 mm² ... 2.5 mm²
Conductor cross-section flexible	0.2 mm² ... 2.5 mm²
Conductor cross-section AWG	24 ... 14
Tightening torque	0.5 Nm ... 0.6 Nm

Test socket

Max. diameter	2 mm

Ex data

Ex installation (EPL)	Gc
	Div. 2
Ex i circuits (EPL)	[Ga]
	[Da]
	[Ma]
	[Div. 1]

Safety data

Input power P_i	negligible
Max. internal inductance L_i	negligible
Max. internal capacitance C_i	negligible
Max. output voltage U_o	25.1 V
Max. output current I_o	188 mA
Max. output power P_o	1.18 W
Maximum internal resistance R_i	133.4 Ω
Safety-related maximum voltage U_m	253 V AC
	125 V DC

IIA/I (simple circuit): Max. external inductivity L_o / Max. external capacitance C_o	8 mH / 2.93 µF
IIB/IIIC (simple circuit): Max. external inductivity L_o / Max. external capacitance C_o	4 mH / 0.83 µF
IIA/I (mixed circuit): Max. external inductivity L_o / Max. external capacitance C_o	5 mH / 510 nF, 1 mH / 560 nF, 0.5 mH / 660 nF, 0.1 mH / 1000 nF
IIB/IIIC (mixed circuit): Max. external inductivity L_o / Max. external capacitance C_o	2 mH / 300 nF, 0.15 mH / 500 nF

Signaling

Status display	Yellow LED (switching state / status, lights up when output circuit is active)

Dimensions

Dimensional drawing	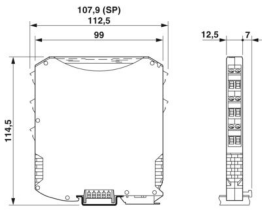
Width	12.5 mm
Height	112.5 mm
Depth	113.7 mm
Depth NS 35/7,5	114.5 mm (Snapped onto DIN rail NS 35/7,5 in accordance with EN 60715)

Material specifications

Color	gray (RAL 7042)
Flammability rating according to UL 94 (Housing)	V0 (Housing)
Housing material	PA 6.6-FR

Environmental and real-life conditions

Ambient conditions

Degree of protection	IP20 (not assessed by UL)
Ambient temperature (operation)	-40 °C ... 60 °C (Any mounting position)
	-40 °C ... 70 °C (Derating)
Ambient temperature (storage/transport)	-40 °C ... 80 °C
Permissible humidity (operation)	10 % ... 95 % (non-condensing)

Altitude range (≤ 2000 m)

Altitude	≤ 2000 m (The technical data refers to altitudes ≤2000 m above mean sea level. For altitudes >2000 m above mean sea level, refer to the data sheet.)
Ambient temperature (operation)	-40 °C ... 70 °C
Safety-related maximum voltage U_m	253 V AC
	125 V DC

Rated insulation voltage	375 V_{PP} (IEC/EN 60079-11)
	265 V ($U_{Isolation\ rated\ "ec"}$)

Altitude range (≤ 3000 m)

Height range	> 2000 m ... 3000 m
Ambient temperature (operation)	-40 °C ... 63 °C
Safety-related maximum voltage U_m	190 V AC
	110 V DC
Rated insulation voltage	190 V (IEC/EN 60079-11)
	190 V ($U_{Isolation\ rated\ "ec"}$)

Altitude range (≤ 4000 m)

Height range	> 3000 m ... 4000 m
Ambient temperature (operation)	-40 °C ... 56 °C
Safety-related maximum voltage U_m	60 V
Rated insulation voltage	60 V (IEC/EN 60079-11)
	60 V ($U_{Isolation\ rated\ "ec"}$)

Altitude range (≤ 5000 m)

Height range	> 4000 m ... 5000 m
Ambient temperature (operation)	-40 °C ... 49 °C
Safety-related maximum voltage U_m	60 V
Rated insulation voltage	60 V (IEC/EN 60079-11)
	60 V ($U_{Isolation\ rated\ "ec"}$)

Approvals

CE

Certificate	CE-compliant
Note	and EN 61326

ATEX

Identification	Ⓔx I (M1) [Ex ia Ma] I
	Ⓔx II (1) G [Ex ia Ga] IIB
	Ⓔx II (1) D [Ex ia Da] IIIC
	Ⓔx II 3 (1) G Ex ec [ia IIB Ga] IIC T4 Gc
Certificate	IBExU 07 ATEX 1133X

IECEx

Identification	[Ex ia Ma] I
	[Ex ia Ga] IIB
	[Ex ia Da] IIIC
	Ex ec [ia IIB Ga] IIC T4 Gc
Certificate	IECEx IBE 08.0002X

CCC / China-Ex

	[Ex ia Ga] IIB

Identification	[Ex ia Da] IIIC
	Ex ec [ia IIB Ga] IIC T4 Gc
Certificate	2022122316115980

UL, USA/Canada

Identification	UL 61010 Listed
	Class I, Div. 2, Groups A, B, C, D T4
	Class I, Div. 2, Groups IIC, IIB, IIA T4
	Associated apparatus for use in Class I, Division 1, Groups C,D
	Associated apparatus for use in Class II, Div.1 Groups E,F,G
	Associated apparatus for use in Class III, Division 1
	Associated apparatus for use in Class I, Zone 0,1,2, Groups IIB, IIA
Certificate	C.D.-No 83104549

Shipbuilding approval

Certificate	DNV GL TAA000020C

Safety Integrity Level (SIL, IEC 61508)

Identification	3

INMETRO

Identification	[Ex ia Ma] I
	[Ex ia Ga] IIB
	[Ex ia Da] IIIC
	Ex ec [ia IIB Ga] IIC T4 Gc
Certificate	DNV 18.0115 X

Shipbuilding data

Temperature	B
Humidity	B
Vibration	A
EMC	A
Enclosure	Required protection according to the Rules shall be provided upon installation on board

EMC data

Electromagnetic compatibility	Conformance with EMC directive
Noise immunity	EN 61000-6-2

Noise emission

Standards/regulations	EN 61000-6-4

Standards and regulations

Electrical isolation	2-way isolation

GB Standard

	GB/T 3836.1

Standards/regulations	GB/T 3836.3
	GB/T 3836.4

Mounting

Mounting type	DIN rail mounting

Drawings

Dimensional drawing

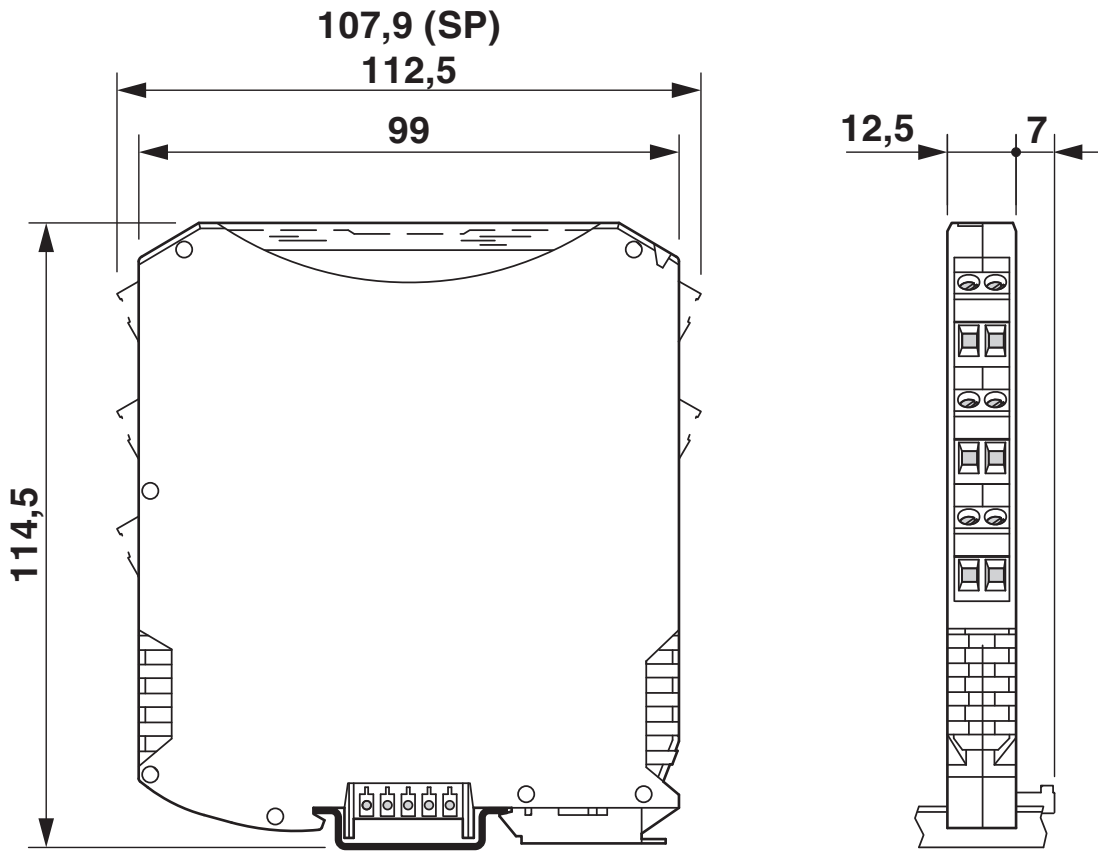

Diagram

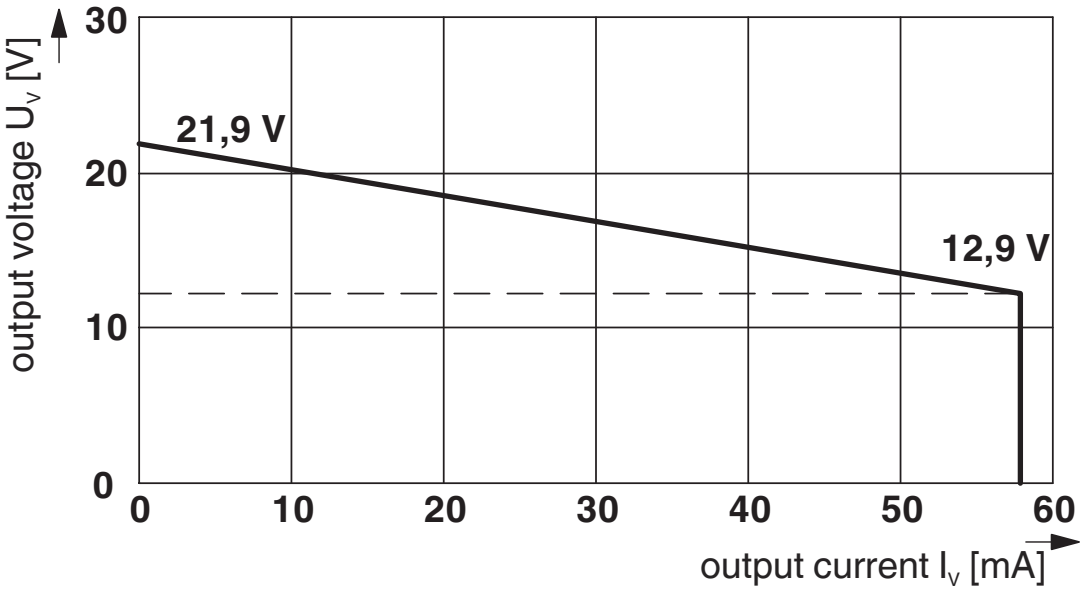

Block diagram

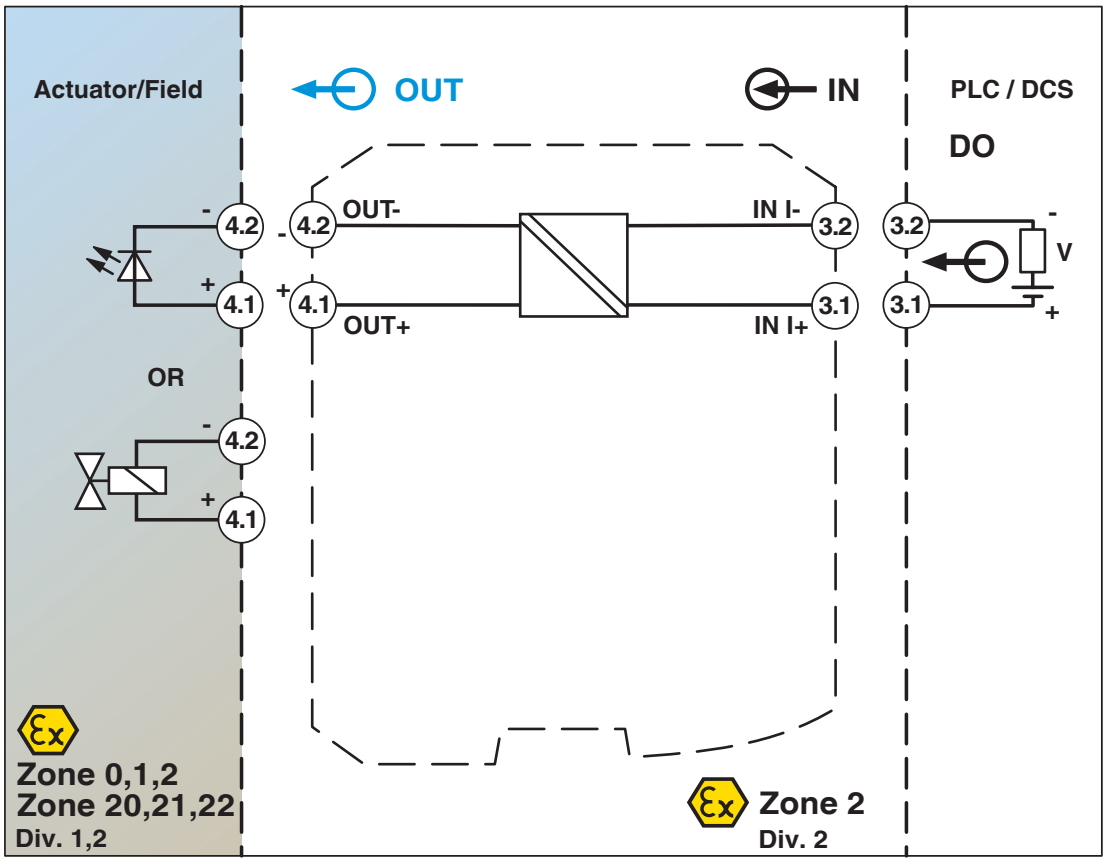

Approvals

To download certificates, visit the product detail page: https://www.phoenixcontact.com/us/products/2865515

DNV
Approval ID: TAA000020C

UL Listed
Approval ID: E330267

cUL Listed
Approval ID: E330267

Functional Safety
Approval ID: 16/04-017 R025 V1R1

IECEx
Approval ID: IECEx IBE 08.0002X

CCC
Approval ID: 2022122316115980

cUL Listed
Approval ID: E199827

UL Listed
Approval ID: E199827

ATEX
Approval ID: IBExU 07 ATEX 1133 X

INMETRO
Approval ID: DNV 18.0115 X

INMETRO
Approval ID: DNV 18.0115 X

IECEx
Approval ID: IECEx IBE 08.0002X

ATEX
Approval ID: IBExU 07 ATEX 1133 X

Classifications

ECLASS

ECLASS-13.0	27210120
ECLASS-15.0	27210120

ETIM

ETIM 10.0	EC002653

UNSPSC

UNSPSC 21.0	39121000

Environmental product compliance

EU RoHS

Fulfills EU RoHS substance requirements	Yes
Exemption	7(a), 7(c)-I

China RoHS

Environment friendly use period (EFUP)	EFUP-50
	An article-related China RoHS declaration table can be found in the download area for the respective article under "Manufacturer declaration". For all articles with EFUP-E, no China RoHS declaration table issued and required.

EU REACH SVHC

REACH candidate substance (CAS No.)	Lead(CAS: 7439-92-1)
	2,2',6,6'-tetrabromo-4,4'-isopropylidenediphenol(CAS: 79-94-7)
SCIP	487ef39d-a7b3-40ac-8eae-deb292519f8f

Phoenix Contact 2026 © - all rights reserved
https://www.phoenixcontact.com

Phoenix Contact USA
586 Fulling Mill Road
Middletown, PA 17057, United States
(+717) 944-1300
info@phoenixcon.com