IB IL AO 2/SF-PAC - Analog module

2863083

https://www.phoenixcontact.com/us/products/2863083

Please be informed that the data shown in this PDF document is generated from our online catalog. Please find the complete data in the user documentation. Our general terms of use for downloads are valid.

CRA-READY



Inline, Analog output terminal, Analog outputs: 2, 0 V ... 10 V, 0 mA ... 20 mA, 4 mA ... 20 mA, connection technology: 2-conductor, transmission speed in the local bus: 500 kbps, degree of protection: IP20, including Inline connectors and marking fields; The product is being prepared for compliance with the Cyber Resilience Act (CRA).

Product description

The terminal is designed for use within an Inline station. It is used to output analog current and voltage signals. The signals are available with a 16-bit resolution.

Your advantages

- 2 analog output channels
- Connection of actuators in 2-conductor technology
- Voltage range: 0 V ... 10 V
- Current ranges: 0 mA ... 20 mA, 4 mA ... 20 mA
- Output values can be represented in two different formats
- Behavior of the outputs in the event of an error can be configured
- Process data update including conversion time of the digital/analog converter < 1 ms

Commercial data

Item number	2863083
Packing unit	1 pc
Minimum order quantity	1 pc
Sales key	DR01
Product key	DRI142
GTIN	4017918917104
Weight per piece (including packing)	244 g
Weight per piece (excluding packing)	190 g
Customs tariff number	85389099
Country of origin	DE

Technical data

Dimensions

Dimensional drawing	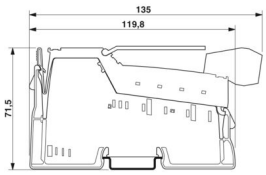
Width	48.8 mm
Height	135 mm
Depth	71.5 mm
Note on dimensions	Housing dimensions

Notes

Note on application	Only for industrial use
Note on application	As things stand now, we are preparing the product so that, as of December 11, 2027, it will comply with the requirements of the EU Cyber Resilience Act (CRA) based on the information currently available regarding the CRA.

Utilization restriction

CCCex note	Use in potentially explosive areas is not permitted in China.

Mounting

Mounting type	DIN rail mounting

Material specifications

Color (Housing)	green (RAL 6021)

Interfaces

Inline local bus

Number of interfaces	2
Connection method	Inline data jumper
Transmission speed	500 kbps

System properties

Programming data

Length code (hex)	02
ID code (dec.)	91
Length code (dec)	02
Process data channel	32 bit
Input address area	4 Byte
Output address area	4 Byte

Parameter channel (PCP)	0 Byte
Register length (bus)	32 bit

Fieldbus data telegram (PROFIBUS)

Required parameter data	6 Byte
Required configuration data	5 Byte

Output data

Analog:

Output name	Analog outputs
Connection technology	2-conductor
Note regarding the connection technology	shielded
Number of outputs	2
D/A converter resolution	16 bit
Protective circuit	Transient protection of outputs
	Short-circuit protection of outputs
Representation of output values	16 bits (15 bits + sign)
DAC resolution	16 bit
Process data update	< 1 ms
Current output signal	0 mA ... 20 mA
	4 mA ... 20 mA
Load/output load current output	≤ 500 Ω
Voltage output signal	0 V ... 10 V
Load/output load voltage output	≥ 2 kΩ
Tolerance, relative	typ. 0.01 % (of output range final value, current range)
	typ. 0.008 % (of output range final value, voltage range)

Product properties

Product type	I/O component
Product family	Inline
Type	modular
Installation location	Control cabinet
Scope of supply	including Inline connectors and marking fields
Operating mode	Process data mode with two words
Special properties	The product is being prepared for compliance with the Cyber Resilience Act (CRA)
Diagnostics messages	I/O supply failure I/O error message sent to the bus coupler

Insulation characteristics

Overvoltage category	II (IEC 60664-1, EN 60664-1)
Pollution degree	2 (IEC 60664-1, EN 60664-1)

Electrical properties

Maximum power dissipation for nominal condition	2.6 W

Potentials: Communications power (U_L)

Supply voltage	7.5 V DC (via voltage jumper)
Current draw	max. 45 mA
	typ. 36 mA

Potentials: Supply of analog modules (U_{ANA})

Supply voltage	24 V DC (via voltage jumper)
Supply voltage range	19.2 V DC ... 30 V DC (including all tolerances, including ripple)
Current draw	max. 95 mA
	typ. 75 mA

Electrical isolation/isolation of the voltage ranges

Test voltage: 7.5 V supply (bus logic), 24 V supply U_{ANA} / I/O	500 V AC, 50 Hz, 1 min
Test voltage: 7.5 V supply (bus logic), 24 V supply U_{ANA} / functional ground	500 V AC, 50 Hz, 1 min
Test voltage: 24 V supply (I/O) / functional ground	500 V AC, 50 Hz, 1 min

Connection data

Connection technology

Connection name	Inline connector

Inline connector

Connection method	Spring-cage connection
Conductor cross-section, rigid	0.08 mm² ... 1.5 mm²
Conductor cross-section, flexible	0.08 mm² ... 1.5 mm²
Conductor cross-section AWG	28 ... 16
Stripping length	8 mm

Environmental and real-life conditions

Ambient conditions

Ambient temperature (operation)	-25 °C ... 55 °C
Degree of protection	IP20
Air pressure (operation)	70 kPa ... 106 kPa (up to 3000 m above sea level)
Air pressure (storage/transport)	70 kPa ... 106 kPa (up to 3000 m above sea level)
Ambient temperature (storage/transport)	-25 °C ... 85 °C
Permissible humidity (operation)	10 % ... 95 % (non-condensing)
Permissible humidity (storage/transport)	10 % ... 95 % (non-condensing)

Mechanical test

Vibration resistance in accordance with EN 60068-2-6/IEC 60068-2-6	5g
Shock in accordance with EN 60068-2-27/IEC 60068-2-27	25g

Standards and regulations

Protection class	III (IEC 61140, EN 61140, VDE 0140-1)

Drawings

Dimensional drawing

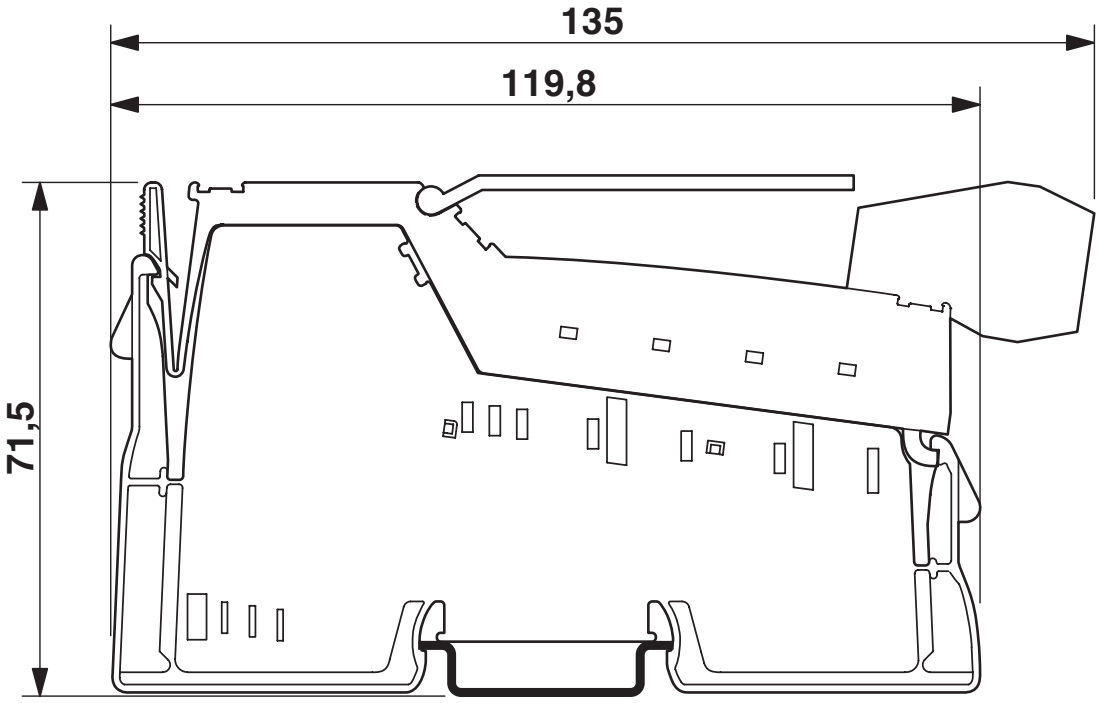

Connection diagram

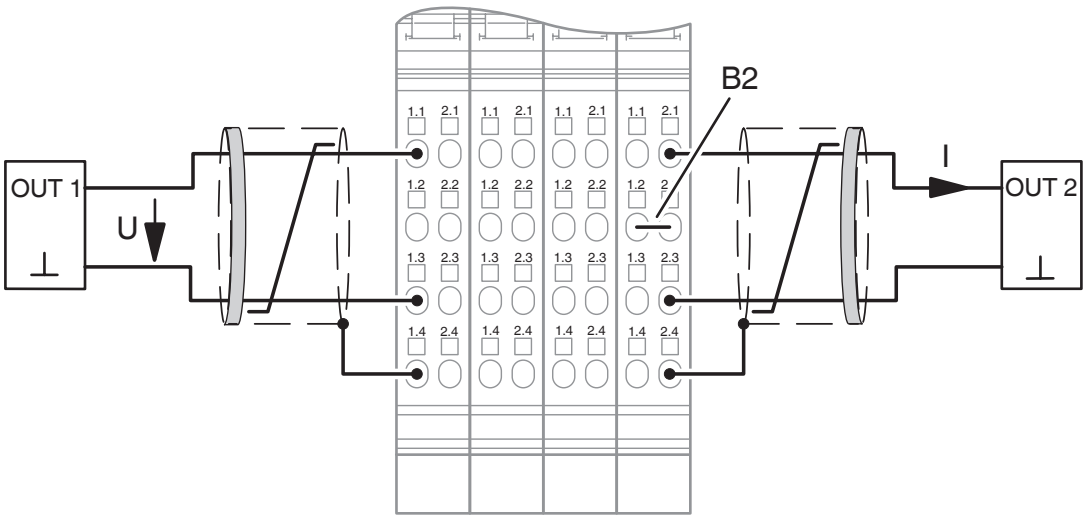

Block diagram

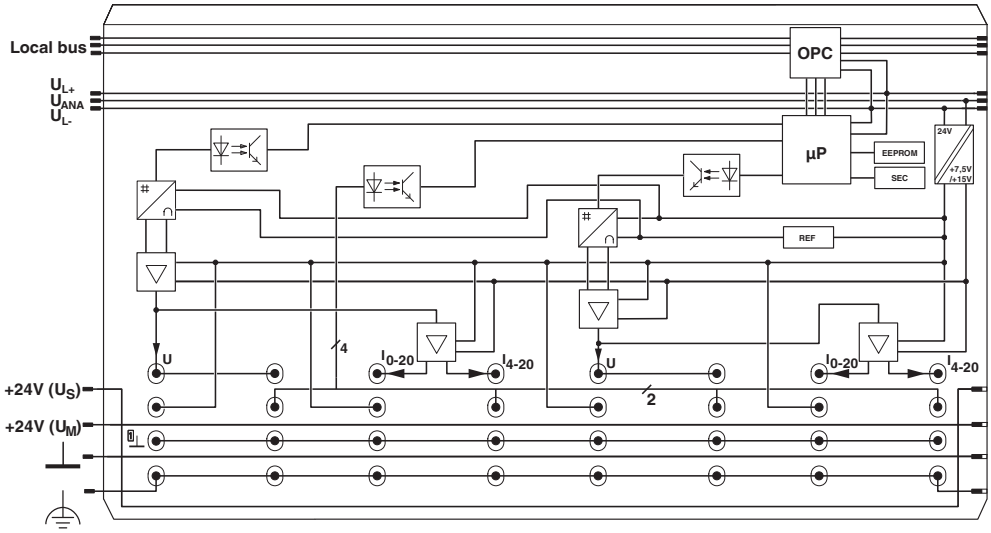

Approvals

To download certificates, visit the product detail page: https://www.phoenixcontact.com/us/products/2863083

BSH
Approval ID: 658a

RINA
Approval ID: ELE121121XG

ABS
Approval ID: 22-2226444-PDA

cULus Recognized
Approval ID: E140324

LR
Approval ID: LR23398855TA

cUL Listed
Approval ID: E256199

UL Listed
Approval ID: E256199

Classifications

ECLASS

ECLASS-13.0	27242601
ECLASS-15.0	27242601

ETIM

ETIM 10.0	EC001596

UNSPSC

UNSPSC 21.0	32151600

Environmental product compliance

EU RoHS

Fulfills EU RoHS substance requirements	Yes
Exemption	7(a), 7(c)-I

China RoHS

Environment friendly use period (EFUP)	EFUP-50
	An article-related China RoHS declaration table can be found in the download area for the respective article under "Manufacturer declaration". For all articles with EFUP-E, no China RoHS declaration table issued and required.

EU REACH SVHC

REACH candidate substance (CAS No.)	Lead(CAS: 7439-92-1)
	6,6'-di-tert-butyl-2,2'-methylenedi-p-cresol(CAS: 119-47-1)
SCIP	05a70494-6ebe-4194-a771-484a50280449

EF3.1 Climate Change

CO2e kg	12.746 kg CO2e

Phoenix Contact 2026 © - all rights reserved
https://www.phoenixcontact.com

Phoenix Contact USA
586 Fulling Mill Road
Middletown, PA 17057, United States
(+717) 944-1300
info@phoenixcon.com