IB IL CNT-PAC - Function module

2861852

https://www.phoenixcontact.com/us/products/2861852

Please be informed that the data shown in this PDF document is generated from our online catalog. Please find the complete data in the user documentation. Our general terms of use for downloads are valid.

CRA-READY



Inline counter terminal, complete with accessories (connector and marking fields), 1 counter input, 1 control input, 1 output, 24 V DC, 500 mA, 3-conductor connection technology

Product description

The terminal is designed for use within an Inline station. The counter terminal acquires and processes fast pulse sequences from sensors. It has a counter input (source), a control input (gate), and a switching output that can be freely parameterized. The switching output is set independently of the terminal. Fast response times can therefore be achieved, which are independent of both the bus and controller. The terminal can be operated in four different operating modes: frequency measurement, event counting, time measurement, and pulse generation (pulse generator).

Your advantages

- 1 counter input
- 1 control input
- 1 freely parameterizable switching output
- Four operating modes: event counting, time or state-controlled frequency measurement, time measurement (period or pulse length), and pulse generator
- Processing of 5 V or 24 V signals
- Input frequency of up to 100 kHz
- 16-bit counter value for time measurement
- 24-bit counter value for event counting and frequency measurement



Commercial data

Item number	2861852
Packing unit	1 pc
Minimum order quantity	1 pc
Sales key	DR01
Product key	DRI163
GTIN	4017918894559
Weight per piece (including packing)	160.6 g
Weight per piece (excluding packing)	130 g
Customs tariff number	85389091
Country of origin	DE

Technical data

Dimensions

Dimensional drawing	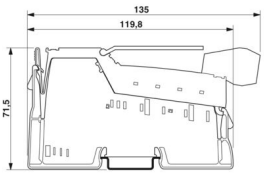
Width	24.4 mm
Height	135 mm
Depth	71.5 mm

Notes

Note on application	Only for industrial use
Note on application	As things stand now, we are preparing the product so that, as of December 11, 2027, it will comply with the requirements of the EU Cyber Resilience Act (CRA) based on the information currently available regarding the CRA.

Mounting

Mounting type	DIN rail mounting

Material specifications

Color (Housing)	green (RAL 6021)

Interfaces

Inline local bus

Number of interfaces	2
Connection method	Inline data jumper
Transmission speed	500 kbps
Transmission physics	Copper

System properties

Programming data

Length code (hex)	02
ID code (dec.)	191
Length code (dec)	02
Process data channel	32 bit
Input address area	4 Byte
Output address area	4 Byte
Parameter channel (PCP)	0 Byte
Register length (bus)	4 Byte

Fieldbus data telegram (PROFIBUS)

Required parameter data	1 Byte
Required configuration data	5 Byte

Input data

Counter:

Input name	Counter input for 24 V signals
Connection method	Spring-cage connection
Connection technology	2-, 3-conductor
Number of inputs	1 (only one counter input can be used, either for 24 V or for 5 V signals)
Operating mode	Event counting, frequency/time measurement
Input voltage	24 V DC (Nominal voltage)
	30 V DC (maximum)
Input voltage range "0" signal	0 V DC ... 5 V DC
Input voltage range "1" signal	15 V DC ... 30 V DC
Input frequency	max. 100 kHz
Input current	typ. 5 mA
Input resistance	approx. 5.7 kΩ

Counter:

Input name	Counter input for 5 V signals
Connection method	Spring-cage connection
Connection technology	2-conductor (shielded), external 5 V supply
Number of inputs	1 (only one counter input can be used, either for 24 V or for 5 V signals)
Operating mode	Event counting, frequency/time measurement
Input voltage	5 V DC (Nominal voltage)
	8 V DC (maximum)
Input voltage range "0" signal	0 V ... 1.5 V
Input voltage range "1" signal	3.5 V ... 8 V
Input frequency	max. 100 kHz
Input current	typ. 5 mA
Input resistance	approx. 1.7 kΩ

Output data

Digital:

Output name	Switching output
Connection method	Spring-cage connection
Connection technology	2-conductor
Number of outputs	1
Protective circuit	Short-circuit protection; Yes, short-circuit-proof (automatically switched on again)
	Overload protection

Output voltage	24 V DC (Nominal voltage)
Limitation of the voltage induced on circuit interruption	approx. -18 V
Output current	max. 0.5 A (Nominal current)
Nominal load, inductive	max. 12 VA (1.2 H, 48 Ω)
Nominal load, lamp	max. 12 W
Nominal load, ohmic	max. 12 W (48 Ω)
Signal delay when switching off an inductive nominal load	< 30 ms
Signal delay when switching off a lamp nominal load	< 1 ms
Signal delay when switching off an ohmic nominal load	< 1 ms
Signal delay when switching on an inductive nominal load	< 1 ms
Signal delay when switching on a lamp nominal load	< 25 µs
Signal delay when switching on an ohmic nominal load	< 50 µs
Behavior in the event of ohmic overload	Auto restart after eliminating the overload
Behavior with inductive overload	Output can be destroyed
Behavior in the event of lamp overload	Auto restart after eliminating the overload
Reverse voltage resistance to short pulses	Reverse voltage proof
Resistance to permanently applied surge voltage	no
Overcurrent shut-down	min. 0.7 A

Product properties

Product type	I/O component
Product family	Inline
Type	modular
Scope of supply	including Inline connectors and marking fields
Operating mode	Process data operation with 2 words
Special properties	The product is being prepared for compliance with the Cyber Resilience Act (CRA)
Diagnostics messages	Sensor supply short-circuit
	Sensor supply overload

Insulation characteristics

Overvoltage category	II (IEC 60664-1, EN 60664-1)
Pollution degree	2 (IEC 60664-1, EN 60664-1)

Electrical properties

Maximum power dissipation for nominal condition	1.2 W

Potentials: Communications power (U_L)

Supply voltage	7.5 V DC (via voltage jumper)
Current draw	max. 50 mA
	typ. 40 mA

Potentials: Segment circuit supply (U_S)

Supply voltage	24 V DC (via voltage jumper)
Current draw	max. 1 A
	min. 0 A (without connected peripherals)

Supply:

Designation	Power supply for sensors
Supply voltage	24 V DC (generated from segment supply U_S)

Electrical isolation/isolation of the voltage ranges

Test voltage: 7.5 V supply (bus logics)/24 V supply (I/O)	500 V AC, 50 Hz, 1 min
Test voltage: 7.5 V supply (bus logic)/functional ground	500 V AC, 50 Hz, 1 min
Test voltage: 24 V supply (I/O) / functional ground	500 V AC, 50 Hz, 1 min

Connection data

Connection technology

Connection name	Inline connector

Inline connector

Connection method	Spring-cage connection
Conductor cross-section, rigid	0.08 mm² ... 1.5 mm²
Conductor cross-section, flexible	0.08 mm² ... 1.5 mm²
Conductor cross-section AWG	28 ... 16
Stripping length	8 mm

Environmental and real-life conditions

Ambient conditions

Ambient temperature (operation)	-25 °C ... 55 °C
Degree of protection	IP20
Air pressure (operation)	70 kPa ... 106 kPa (up to 3000 m above sea level)
Air pressure (storage/transport)	70 kPa ... 106 kPa (up to 3000 m above sea level)
Ambient temperature (storage/transport)	-25 °C ... 85 °C
Permissible humidity (operation)	10 % ... 95 % (non-condensing)
Permissible humidity (storage/transport)	10 % ... 95 % (non-condensing)

Mechanical test

Vibration resistance in accordance with EN 60068-2-6/IEC 60068-2-6	5g
Shock in accordance with EN 60068-2-27/IEC 60068-2-27	25g

Standards and regulations

Protection class	III (IEC 61140, EN 61140, VDE 0140-1)

Drawings

Dimensional drawing

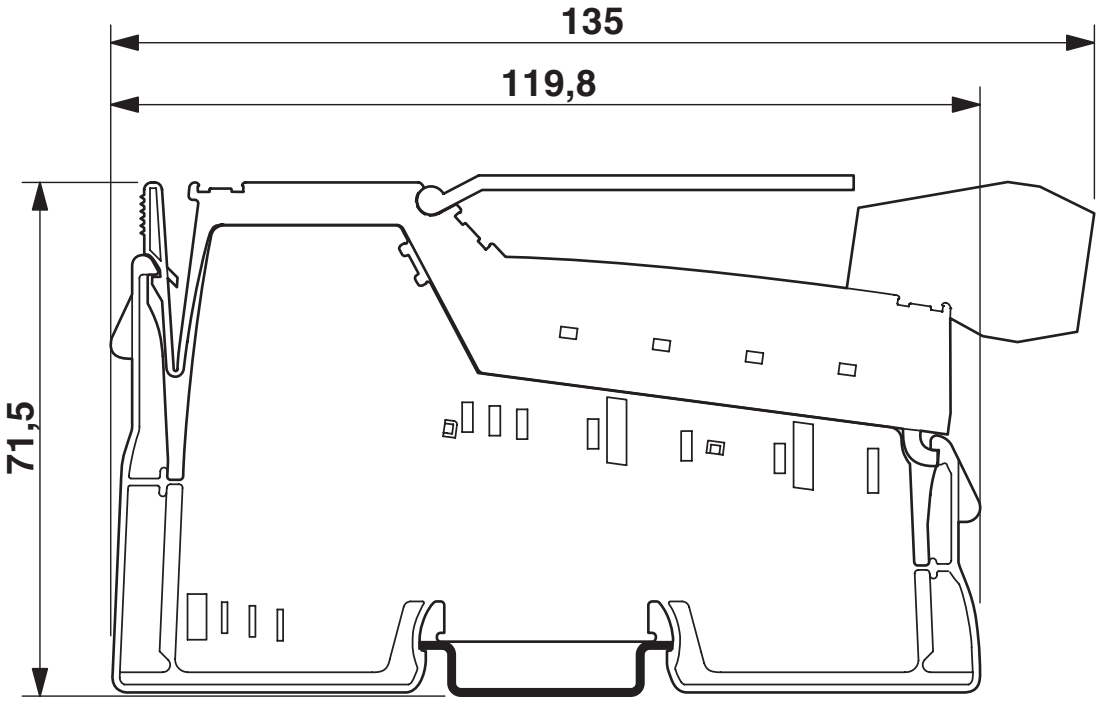

Connection diagram

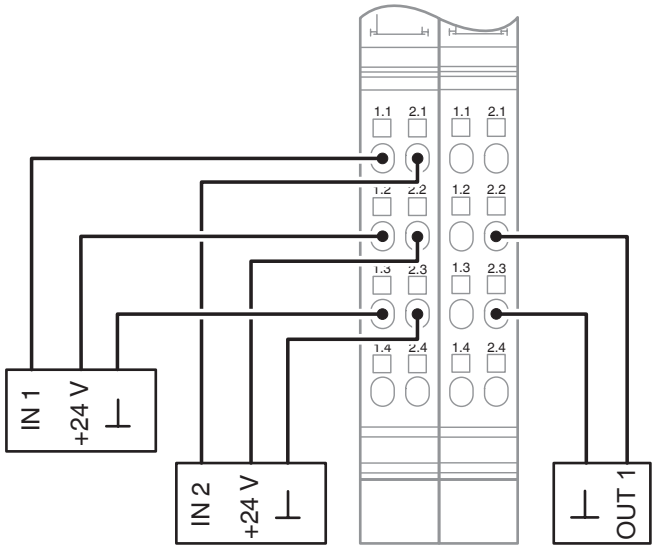

Block diagram

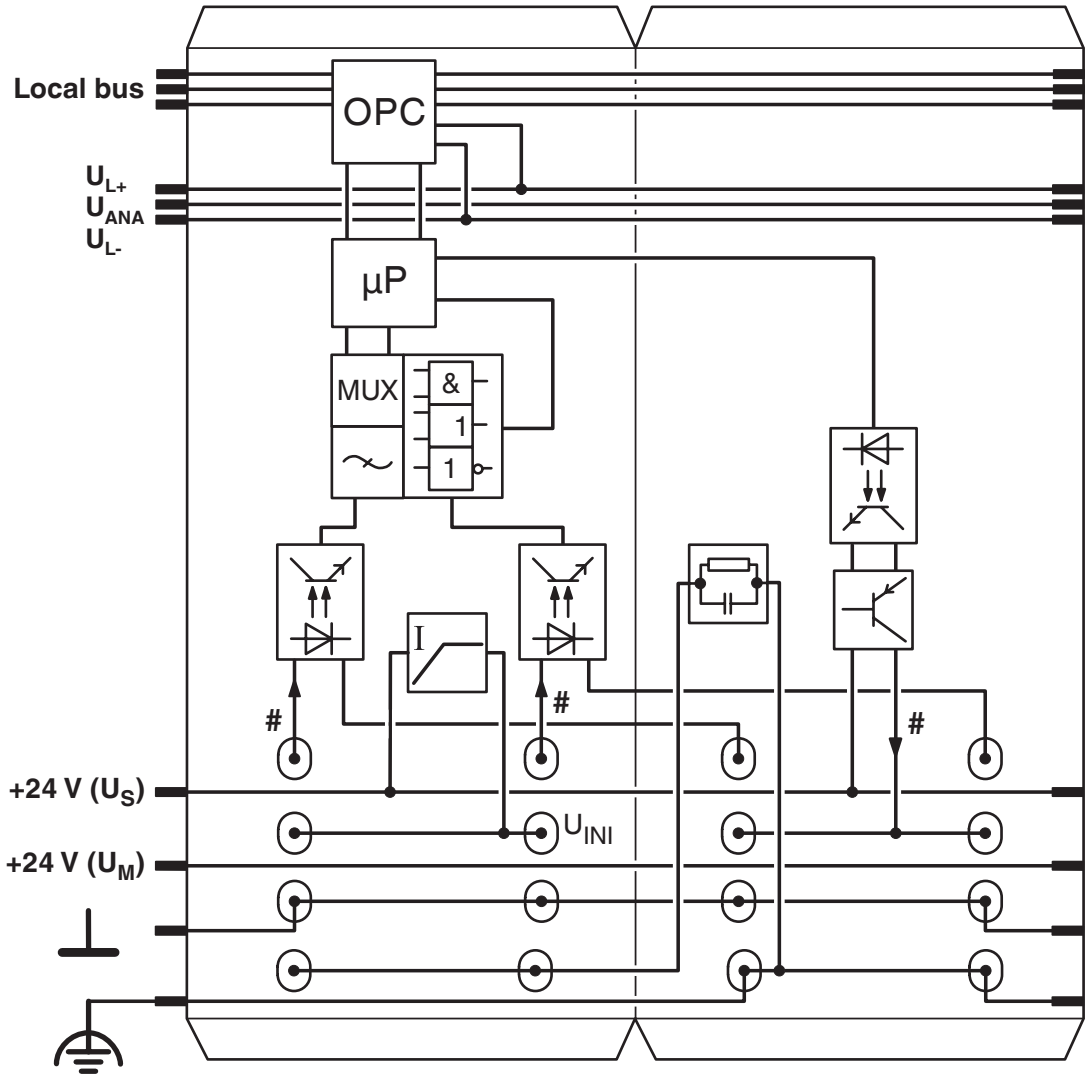

Approvals

To download certificates, visit the product detail page: https://www.phoenixcontact.com/us/products/2861852

BV
Approval ID: 20989_C1 BV

BSH
Approval ID: 658a

RINA
Approval ID: ELE121121XG

ABS
Approval ID: 22-2226444-PDA

DNV
Approval ID: TAA00002CU

cULus Recognized
Approval ID: E140324

cULus Listed
Approval ID: E360692

Classifications

ECLASS

ECLASS-13.0	27242605
ECLASS-15.0	27242605

ETIM

ETIM 10.0	EC001601

UNSPSC

UNSPSC 21.0	32151600

Environmental product compliance

EU RoHS

Fulfills EU RoHS substance requirements	Yes
Exemption	7(a), 7(c)-I

China RoHS

Environment friendly use period (EFUP)	EFUP-50
	An article-related China RoHS declaration table can be found in the download area for the respective article under "Manufacturer declaration". For all articles with EFUP-E, no China RoHS declaration table issued and required.

EU REACH SVHC

REACH candidate substance (CAS No.)	Lead(CAS: 7439-92-1)
SCIP	72b42463-e334-4800-985f-b2de2f96ef54

EF3.1 Climate Change

CO2e kg	4.623 kg CO2e

Phoenix Contact 2026 © - all rights reserved
https://www.phoenixcontact.com

Phoenix Contact USA
586 Fulling Mill Road
Middletown, PA 17057, United States
(+717) 944-1300
info@phoenixcon.com