IB IL AI 8/IS-PAC - Analog module

2861661

https://www.phoenixcontact.com/us/products/2861661

Please be informed that the data shown in this PDF document is generated from our online catalog. Please find the complete data in the user documentation. Our general terms of use for downloads are valid.

CRA-READY



Inline, Analog input terminal, Analog inputs: 8, 0 mA ... 20 mA, 4 mA ... 20 mA, -20 mA ... 20 mA, 0 mA ... 40 mA, -40 mA ... 40 mA, connection technology: 2-, 3-conductor, transmission speed in the local bus: 500 kbps, integrated sensor supply, degree of protection: IP20, including Inline connectors and marking fields; The product is being prepared for compliance with the Cyber Resilience Act (CRA).

Product description

The terminal is designed for use within an Inline station. It is used to acquire analog current signals.

Your advantages

- 8 analog single-ended signal inputs for the connection of active and passive current sensors
- Connection of sensors in 2- and 3-conductor technology
- Current ranges: 0 mA ... 20 mA, 4 mA ... 20 mA, ±20 mA, 0 mA ... 40 mA, ±40 mA
- The channels are parameterized independently of one another via the bus system
- Measured values can be represented in five different formats
- 16-bit analog-to-digital converter
- Process data multiplex mode
- High measuring accuracy
- Excellent interference suppression and common mode rejection
- Integrated short-circuit-proof sensor supply
- Overload-protected current inputs

Commercial data

Item number	2861661
Packing unit	1 pc
Minimum order quantity	1 pc
Sales key	DR01
Product key	DRI141
GTIN	4017918894504
Weight per piece (including packing)	246.2 g
Weight per piece (excluding packing)	125 g

Customs tariff number	85389099
Country of origin	DE

Technical data

Dimensions

Dimensional drawing	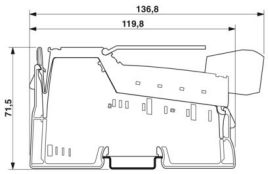
Width	48.8 mm
Height	136.8 mm
Depth	71.5 mm
Note on dimensions	Housing dimensions

Notes

Note on application	Only for industrial use
Note on application	As things stand now, we are preparing the product so that, as of December 11, 2027, it will comply with the requirements of the EU Cyber Resilience Act (CRA) based on the information currently available regarding the CRA.

Mounting

Mounting type	DIN rail mounting

Material specifications

Color (Housing)	green (RAL 6021)

Interfaces

Inline local bus

Number of interfaces	2
Connection method	Inline data jumper
Transmission speed	500 kbps
Transmission physics	Copper

System properties

Programming data

Length code (hex)	02
ID code (dec.)	95
Length code (dec)	02
Process data channel	32 bit
Input address area	4 Byte
Output address area	4 Byte
Parameter channel (PCP)	0 Byte

Register length (bus)	32 bit

Fieldbus data telegram (PROFIBUS)

Required parameter data	6 Byte
Required configuration data	5 Byte

Input data

Analog:

Input name	Analog inputs
Description of the input	Single-ended inputs, current
Number of inputs	8
Connection method	Inline shield connector
Connection technology	2-, 3-conductor
Note regarding the connection technology	shielded
Process data update	bus-synchronous
A/D conversion time	approx. 10 µs
A/D converter resolution	16 bit
Limit frequency (3 dB)	3.5 kHz
Wire-break behavior	goes to 0 mA or 4 mA
Permissible voltage	max. ± 2.5 V (between analog current inputs and analog reference potential, correspond to 100 mA through the shunts)
	max. ± 2.5 V (between two current inputs, correspond to 100 mA through the shunts)
Measuring principle	Successive approximation
Measured value resolution	16 bits (15 bits + sign bit)
Measured value representation	16 bits two's complement and other
Data formats	IB IL, IB ST, IB RT, standardized representation, PIO format
Current input signal	0 mA ... 20 mA
	4 mA ... 20 mA
	-20 mA ... 20 mA
	0 mA ... 40 mA
	-40 mA ... 40 mA
Input resistance current input	25 Ω (Shunt)

Product properties

Product type	I/O component
Product family	Inline
Type	modular
Installation location	Control cabinet
Scope of supply	including Inline connectors and marking fields
Operating mode	Process data operation with 2 words
Special properties	The product is being prepared for compliance with the Cyber Resilience Act (CRA)
	integrated sensor supply
	Failure of the power supply at U_{ANA} I/O error message

Diagnostics messages	I/O error Error message in the process data
	User error Error message in the process data

Insulation characteristics

Overvoltage category	II (IEC 60664-1, EN 60664-1)
Pollution degree	2 (IEC 60664-1, EN 60664-1)

Electrical properties

Maximum power dissipation for nominal condition	1.55 W

Potentials: Communications power (U_L)

Supply voltage	7.5 V DC (via voltage jumper)
Current draw	max. 65 mA
	typ. 52 mA

Potentials: Supply of analog modules (U_{ANA})

Supply voltage	24 V DC (via voltage jumper)
Supply voltage range	19.2 V DC ... 30 V DC (including all tolerances, including ripple)
Current draw	max. 40 mA
	typ. 31 mA

Potentials: Main circuit supply (U_M)

Supply voltage	24 V DC (via voltage jumper)
Supply voltage range	19.2 V DC ... 30 V DC (including all tolerances, including ripple)
Current draw	max. 200 mA
	0 A

Supply:

Designation	Sensor supply U_{iS}
Supply voltage	24 V DC (via feed-in from U_M)
Current consumption	typ. 20 mA (Nominal current per channel)
	max. 50 mA (per I/O connector, total current for both channels on the slot)

Electrical isolation/isolation of the voltage ranges

Test voltage: 7.5 V supply (bus logic), 24 V supply U_{ANA} / I/O	500 V AC, 50 Hz, 1 min
Test voltage: 7.5 V supply (bus logic), 24 V supply U_{ANA} / functional ground	500 V AC, 50 Hz, 1 min
Test voltage: I/O/functional ground	500 V AC, 50 Hz, 1 min

Connection data

Connection technology

Connection name	Inline connector

Inline connector

Connection method	Spring-cage connection
Conductor cross-section, rigid	0.08 mm² ... 1.5 mm²

Conductor cross-section, flexible	0.08 mm² ... 1.5 mm²
Conductor cross-section AWG	28 ... 16
Stripping length	8 mm

Environmental and real-life conditions

Ambient conditions

Ambient temperature (operation)	-25 °C ... 55 °C
Degree of protection	IP20
Air pressure (operation)	70 kPa ... 106 kPa (up to 3000 m above sea level)
Air pressure (storage/transport)	70 kPa ... 106 kPa (up to 3000 m above sea level)
Ambient temperature (storage/transport)	-25 °C ... 85 °C
Permissible humidity (operation)	10 % ... 95 % (non-condensing)
Permissible humidity (storage/transport)	10 % ... 95 % (non-condensing)

Mechanical test

Vibration resistance in accordance with EN 60068-2-6/IEC 60068-2-6	5g
Shock in accordance with EN 60068-2-27/IEC 60068-2-27	25g

Standards and regulations

Protection class	III (IEC 61140, EN 61140, VDE 0140-1)

Drawings

Dimensional drawing

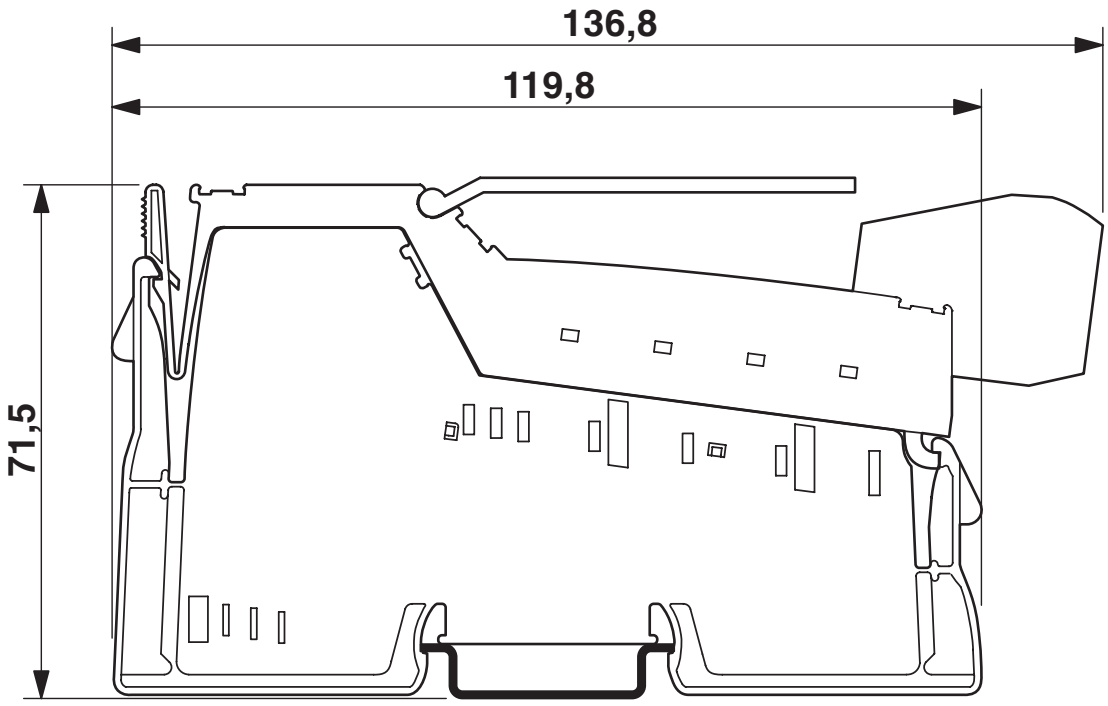

Connection diagram

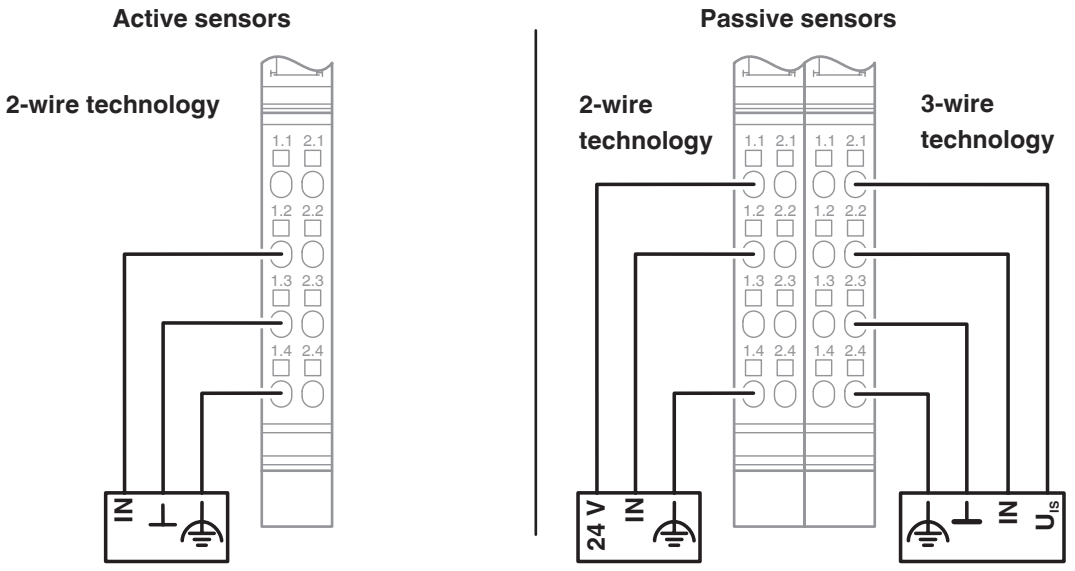

Block diagram

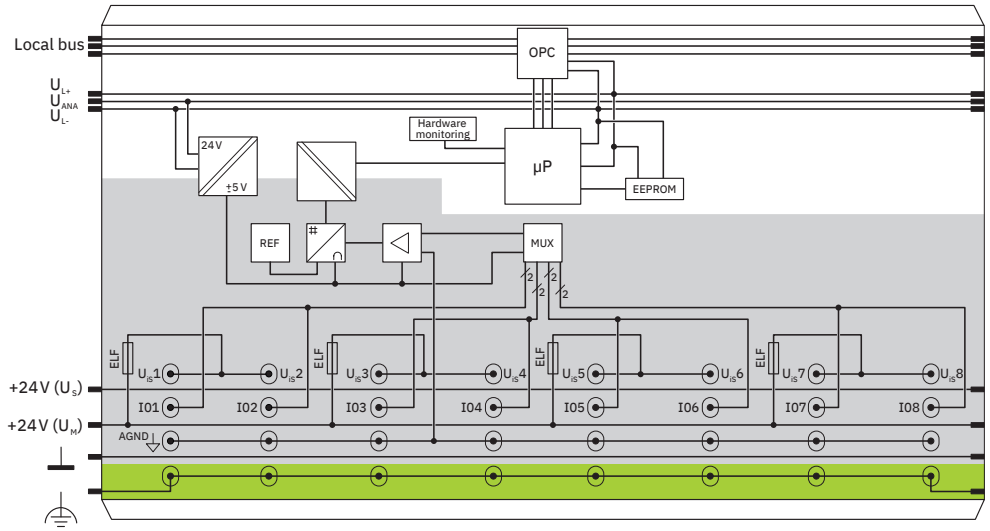

Approvals

To download certificates, visit the product detail page: https://www.phoenixcontact.com/us/products/2861661

BV
Approval ID: 20989_C1 BV

BSH
Approval ID: 658a

RINA
Approval ID: ELE121121XG

ABS
Approval ID: 22-2226444-PDA

DNV
Approval ID: TAA00002CU

cULus Recognized
Approval ID: E140324

cULus Recognized
Approval ID: E238705

Classifications

ECLASS

ECLASS-13.0	27242601
ECLASS-15.0	27242601

ETIM

ETIM 10.0	EC001596

UNSPSC

UNSPSC 21.0	32151600

Environmental product compliance

EU RoHS

Fulfills EU RoHS substance requirements	Yes
Exemption	7(a), 7(c)-I

China RoHS

Environment friendly use period (EFUP)	EFUP-50
	An article-related China RoHS declaration table can be found in the download area for the respective article under "Manufacturer declaration". For all articles with EFUP-E, no China RoHS declaration table issued and required.

EU REACH SVHC

REACH candidate substance (CAS No.)	Lead(CAS: 7439-92-1)
	6,6'-di-tert-butyl-2,2'-methylenedi-p-cresol(CAS: 119-47-1)
SCIP	03432ea5-3ff4-4000-885b-8f9e596b82f2

EF3.1 Climate Change

CO2e kg	8.777 kg CO2e

Phoenix Contact 2026 © - all rights reserved
https://www.phoenixcontact.com

Phoenix Contact USA
586 Fulling Mill Road
Middletown, PA 17057, United States
(+717) 944-1300
info@phoenixcon.com