IB IL AO 2/U/BP-PAC - Analog module

2861467

https://www.phoenixcontact.com/us/products/2861467

Please be informed that the data shown in this PDF document is generated from our online catalog. Please find the complete data in the user documentation. Our general terms of use for downloads are valid.



Inline, Analog output terminal, Analog outputs: 2, 0 V ... 10 V, -10 V ... 10 V, connection technology: 2-conductor, transmission speed in the local bus: 500 kbps, degree of protection: IP20, including Inline connector and labeling field; The product is being prepared for compliance with the Cyber Resilience Act (CRA).

Product description

The terminal is designed for use within an Inline station. It is used to output analog voltage signals.

Your advantages

- 2 analog output channels
- Connection of actuators in 2-conductor technology
- Voltage ranges: 0 V ... 10 V, ±10 V
- Output values can be represented in two different formats
- Behavior of the outputs in the event of an error can be configured
- Process data update including conversion time of the digital/analog converter < 1 ms
- Very good output driver characteristics, making it also suitable for long actuator cables

Commercial data

Item number	2861467

Packing unit	1 pc
Minimum order quantity	1 pc
Sales key	DR01
Product key	DRI142
GTIN	4017918894382
Weight per piece (including packing)	88 g
Weight per piece (excluding packing)	48 g
Customs tariff number	85389099
Country of origin	DE

Technical data

Dimensions

Dimensional drawing	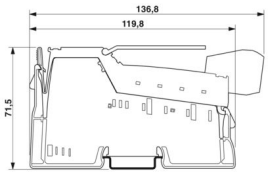
Width	12.2 mm
Height	136.8 mm
Depth	71.5 mm

Notes

Note on application	Only for industrial use
Note on application	As things stand now, we are preparing the product so that, as of December 11, 2027, it will comply with the requirements of the EU Cyber Resilience Act (CRA) based on the information currently available regarding the CRA.

Utilization restriction

CCCex note	Use in potentially explosive areas is not permitted in China.

Mounting

Mounting type	DIN rail mounting

Material specifications

Color (Housing)	green (RAL 6021)

Interfaces

Inline local bus

Number of interfaces	2
Connection method	Inline data jumper
Transmission speed	500 kbps

System properties

Programming data

Length code (hex)	02
ID code (dec.)	91
Length code (dec)	02
Process data channel	32 bit
Input address area	4 Byte
Output address area	4 Byte

Parameter channel (PCP)	0 Byte
Register length (bus)	32 bit

Fieldbus data telegram (PROFIBUS)

Required parameter data	6 Byte
Required configuration data	5 Byte

Output data

Analog:

Output name	Analog outputs
Output description	Single-ended
Connection technology	2-conductor
Note regarding the connection technology	shielded
Number of outputs	2
D/A conversion time	< 100 ns
Protective circuit	Transient protection of outputs
Data formats	IB IL, IB ST
Representation of output values	16 bits (15 bits + sign)
DAC resolution	13 bit
Process data update	< 1 ms
Voltage output signal	0 V ... 10 V
	-10 V ... 10 V
Load/output load voltage output	> 2 kΩ
Permissible cable length	max. 500 m (The specifications refer to nominal operation after complying with installation instructions. The specifications refer to the following reference cable type: Shielded power station cable: LiYCY; 2 x 2 x 0,5 mm²; VDE0812)
Tolerance, relative	typ. 0.02 % (of output range final value)
Settling time	typ. 15 µs (10 % ... 90 % of final value)
	typ. 31 µs (0 % ... >99 % of final value)

Product properties

Product type	I/O component
Product family	Inline
Type	modular
Installation location	Control cabinet
Scope of supply	including Inline connector and labeling field
Operating mode	Process data operation with 2 words
Special properties	The product is being prepared for compliance with the Cyber Resilience Act (CRA)
Diagnostics messages	Failure of or insufficient communications power U_L I/O error message sent to the bus coupler

Insulation characteristics

Overvoltage category	II (IEC 60664-1, EN 60664-1)
Pollution degree	2 (IEC 60664-1, EN 60664-1)

Electrical properties

Maximum power dissipation for nominal condition	1.15 W

Potentials: Communications power (U_L)

Supply voltage	7.5 V DC (via voltage jumper)
Current draw	max. 40 mA
	typ. 33 mA

Potentials: Supply of analog modules (U_{ANA})

Supply voltage	24 V DC (via voltage jumper)
Supply voltage range	19.2 V DC ... 30 V DC (including all tolerances, including ripple)
Current draw	max. 35 mA (Full load (R_L = 2 kΩ))
	max. 28 mA (No-load)
	typ. 25 mA (Full load (R_L = 2 kΩ))
	typ. 18 mA (No-load)

Electrical isolation/isolation of the voltage ranges

Test voltage: 7.5 V supply (bus logic), 24 V supply U_{ANA} / I/O	500 V AC, 50 Hz, 1 min
Test voltage: 7.5 V supply (bus logic), 24 V supply U_{ANA} / functional ground	500 V AC, 50 Hz, 1 min
Test voltage: 24 V supply (I/O) / functional ground	500 V AC, 50 Hz, 1 min

Connection data

Connection technology

Connection name	Inline connector

Inline connector

Connection method	Spring-cage connection
Conductor cross-section, rigid	0.08 mm² ... 1.5 mm²
Conductor cross-section, flexible	0.08 mm² ... 1.5 mm²
Conductor cross-section AWG	28 ... 16
Stripping length	8 mm

Environmental and real-life conditions

Ambient conditions

Ambient temperature (operation)	-25 °C ... 55 °C
Degree of protection	IP20
Air pressure (operation)	70 kPa ... 106 kPa (up to 3000 m above sea level)
Air pressure (storage/transport)	70 kPa ... 106 kPa (up to 3000 m above sea level)
Ambient temperature (storage/transport)	-25 °C ... 85 °C
Permissible humidity (operation)	10 % ... 95 % (non-condensing)
Permissible humidity (storage/transport)	10 % ... 95 % (non-condensing)

Mechanical test

Vibration resistance in accordance with EN 60068-2-6/IEC 60068-2-6	5g
Shock in accordance with EN 60068-2-27/IEC 60068-2-27	25g

Standards and regulations

Protection class	III (IEC 61140, EN 61140, VDE 0140-1)

Drawings

Dimensional drawing

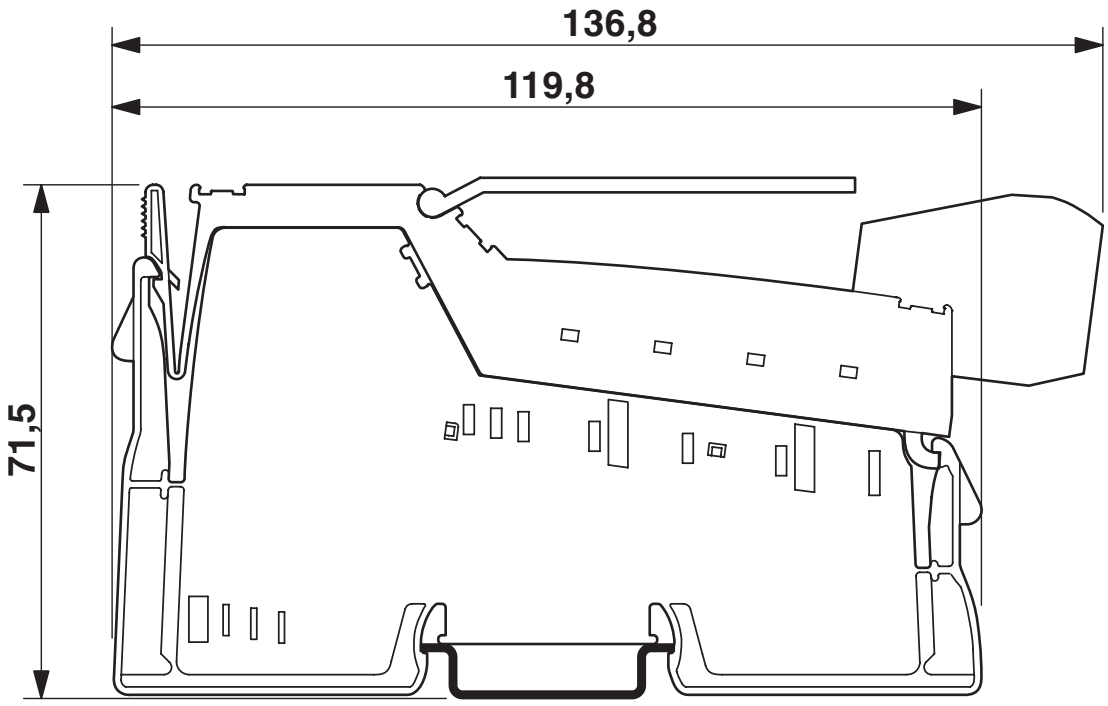

Connection diagram

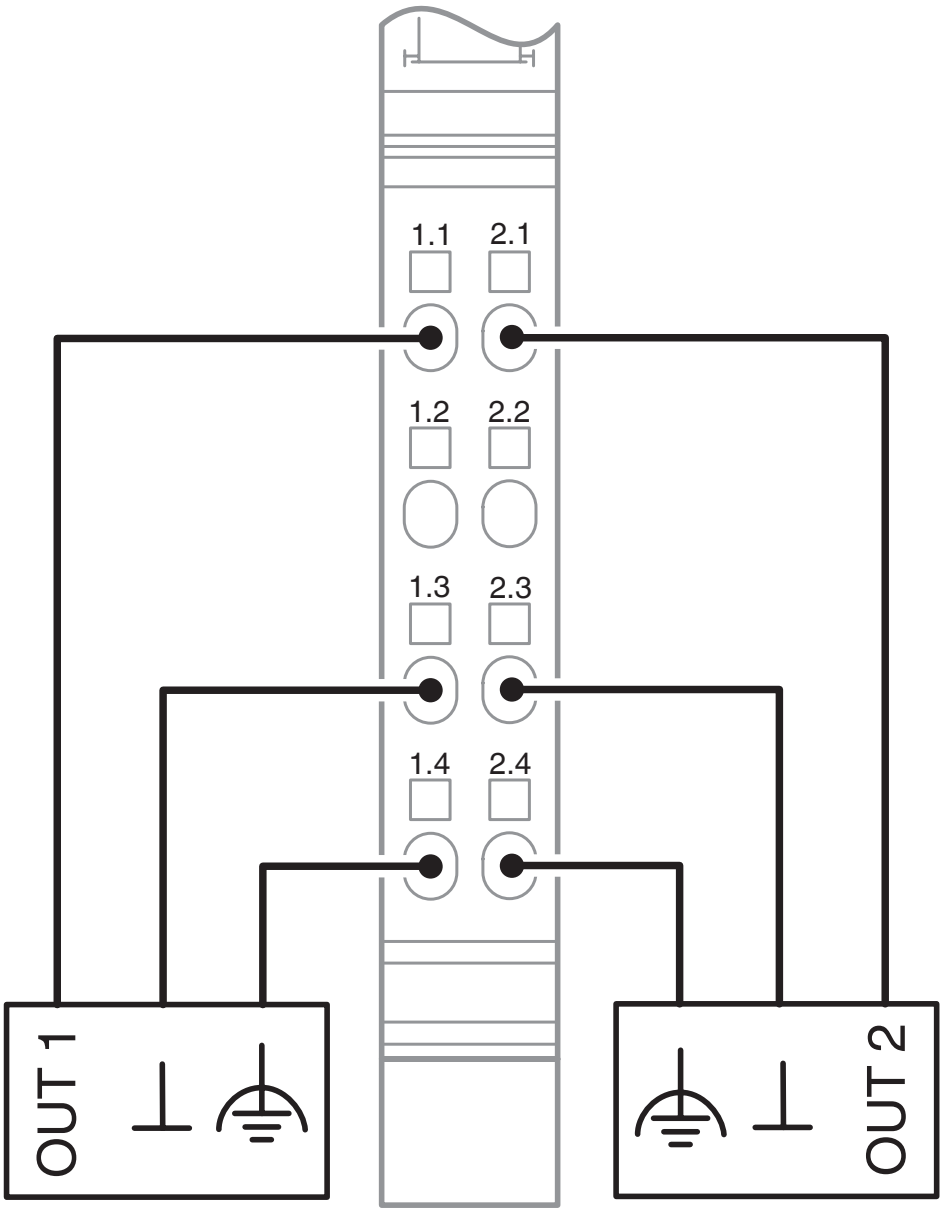

Connection of two voltage actuators in 2-conductor technology with shield connection

Block diagram

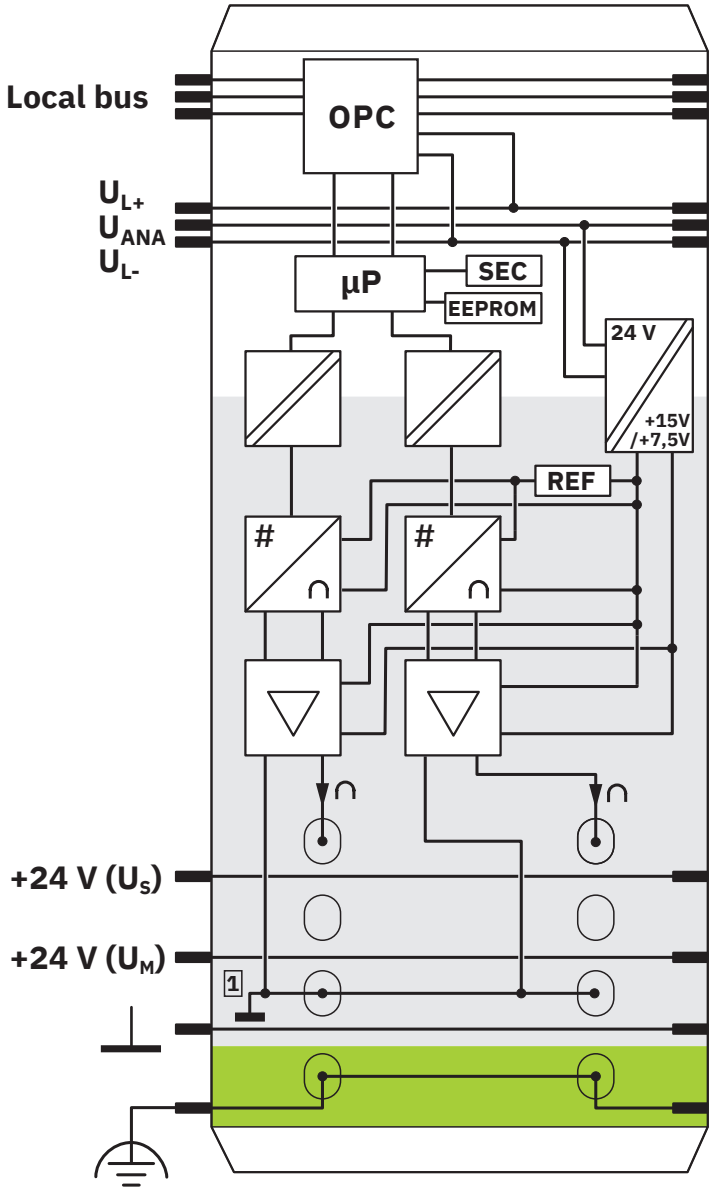

Internal wiring of the terminal points

Approvals

To download certificates, visit the product detail page: https://www.phoenixcontact.com/us/products/2861467

BV
Approval ID: 20989_C1 BV

BSH
Approval ID: 658a

RINA
Approval ID: ELE121121XG

ABS
Approval ID: 22-2226444-PDA

DNV
Approval ID: TAA00002CU

cULus Recognized
Approval ID: E140324

cULus Listed
Approval ID: E199827

Classifications

ECLASS

ECLASS-13.0	27242601
ECLASS-15.0	27242601

ETIM

ETIM 10.0	EC001596

UNSPSC

UNSPSC 21.0	32151600

Environmental product compliance

EU RoHS

Fulfills EU RoHS substance requirements	Yes
Exemption	7(a), 7(c)-I

China RoHS

Environment friendly use period (EFUP)	EFUP-50
	An article-related China RoHS declaration table can be found in the download area for the respective article under "Manufacturer declaration". For all articles with EFUP-E, no China RoHS declaration table issued and required.

EU REACH SVHC

REACH candidate substance (CAS No.)	Lead(CAS: 7439-92-1)
SCIP	1a76c769-0176-4a2b-8746-c149e84bdc0f

EF3.1 Climate Change

CO2e kg	9.829 kg CO2e

Phoenix Contact 2026 © - all rights reserved
https://www.phoenixcontact.com

Phoenix Contact USA
586 Fulling Mill Road
Middletown, PA 17057, United States
(+717) 944-1300
info@phoenixcon.com