IB IL 24 SEG-ELF-PAC - Segmentation module

2861409

https://www.phoenixcontact.com/us/products/2861409

Please be informed that the data shown in this PDF document is generated from our online catalog. Please find the complete data in the user documentation. Our general terms of use for downloads are valid.



Inline segment terminal block, complete with accessories (connector and labeling field), 24 V DC, electronic fuse

Product description

The terminal is designed for use within an Inline station. This terminal can be used to create a partial circuit (segment circuit) within a main circuit. The terminal is not used for voltage supply. It therefore does not have any elements for protection against polarity reversal and surge voltage. This terminal has an LED for bus diagnostics. It occupies two input data bits, which indicate the status of the electronic fuse.

Your advantages

- Automatic creation of a segment circuit in the main circuit
- Protection of the segment circuit using an electronic fuse with short-circuit current limitation
- Diagnostic and status indicators

ELEKTROGERÄTE RÜCKNAHME

Commercial data

Item number	2861409
Packing unit	1 pc
Minimum order quantity	1 pc
Sales key	DR01
Product key	DRI122
GTIN	4017918894344
Weight per piece (including packing)	71.2 g
Weight per piece (excluding packing)	44 g
Customs tariff number	85389099

Country of origin	DE

Technical data

Dimensions

Dimensional drawing	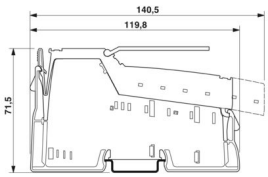
Width	12.2 mm
Height	119.8 mm
Depth	71.5 mm

Notes

Note on application

Note on application	Only for industrial use

Utilization restriction

CCCex note	Use in potentially explosive areas is not permitted in China.

Mounting

Mounting type	DIN rail mounting

Material specifications

Color (Housing)	green (RAL 6021)

Interfaces

Inline local bus

Number of interfaces	2
Connection method	Inline data jumper
Transmission speed	500 kbps / 2 Mbps

System properties

Programming data

Length code (hex)	C2
ID code (dec.)	190
Length code (dec)	194
Process data channel	2 bit
Input address area	2 bit
Output address area	0 bit
Parameter channel (PCP)	0 bit
Register length (bus)	2 bit

Fieldbus data telegram (PROFIBUS)

Required parameter data	1 Byte
Required configuration data	4 Byte

Product properties

Product type	I/O component
Product family	Inline
Type	modular
Installation location	Control cabinet
Number of plugs	1

Insulation characteristics

Protection class	III (IEC 61140, EN 61140, VDE 0140-1)
Overvoltage category	II (IEC 60664-1, EN 60664-1)
Pollution degree	2 (IEC 60664-1, EN 60664-1)

Electrical properties

Maximum power dissipation for nominal condition	0.65 W
Test section	5 V supply, incoming remote bus/7.5 V supply (bus logics) 500 V AC 50 Hz 1 min
	5 V supply, outgoing remote bus/7.5 V supply (bus logics) 500 V AC 50 Hz 1 min
	7.5 V supply (bus logics)/24 V supply (I/O) 500 V AC 50 Hz 1 min
	24 V supply (I/O) / functional ground 500 V AC 50 Hz 1 min
Protective circuit	Overload protection
Fuse	2.5 A (electronic)

Supply

I/O voltage	24 V DC
I/O voltage range	19.2 V DC ... 30 V DC
Residual ripple	± 1.2 V
Max. current consumption	2.5 A
Typical current consumption	30 mA

Potentials: Communications power (U_L)

Supply voltage	7.5 V DC (via voltage jumper)
Current draw	max. 30 mA

Potentials: Main circuit supply (U_M)

Supply voltage	24 V DC
Supply voltage range	19.2 V DC ... 30 V DC (including all tolerances, including ripple)
Current draw	max. 2.5 A (nominal value)

Potentials: Segment circuit supply (U_S)

Supply voltage	24 V DC
Supply voltage range	19.2 V DC ... 30 V DC (including all tolerances, including ripple)
Power supply	max. 2.5 A (nominal value)

Connection data

Connection technology

Connection name	Inline connector

Inline connector

Connection method	Spring-cage connection
Conductor cross-section, rigid	0.08 mm² ... 1.5 mm²
Conductor cross-section, flexible	0.08 mm² ... 1.5 mm²
Conductor cross-section AWG	28 ... 16
Stripping length	8 mm

Environmental and real-life conditions

Ambient conditions

Degree of protection	IP20
Ambient temperature (operation)	-25 °C ... 55 °C
Ambient temperature (storage/transport)	-25 °C ... 85 °C
Permissible humidity (operation)	75 % ... 85 % (in the range of -25°C ... +55°C, appropriate measures against increased humidity (> 85%) must be taken.)
Permissible humidity (storage/transport)	75 % ... 85 % (Slight temporary condensation may sometimes appear on the housing, e.g. when the terminal block is brought out of a vehicle into an enclosed room.)

Mechanical test

Vibration resistance in accordance with EN 60068-2-6/IEC 60068-2-6	5g
Shock in accordance with EN 60068-2-27/IEC 60068-2-27	25g

Standards and regulations

Protection class	III (IEC 61140, EN 61140, VDE 0140-1)

Drawings

Dimensional drawing

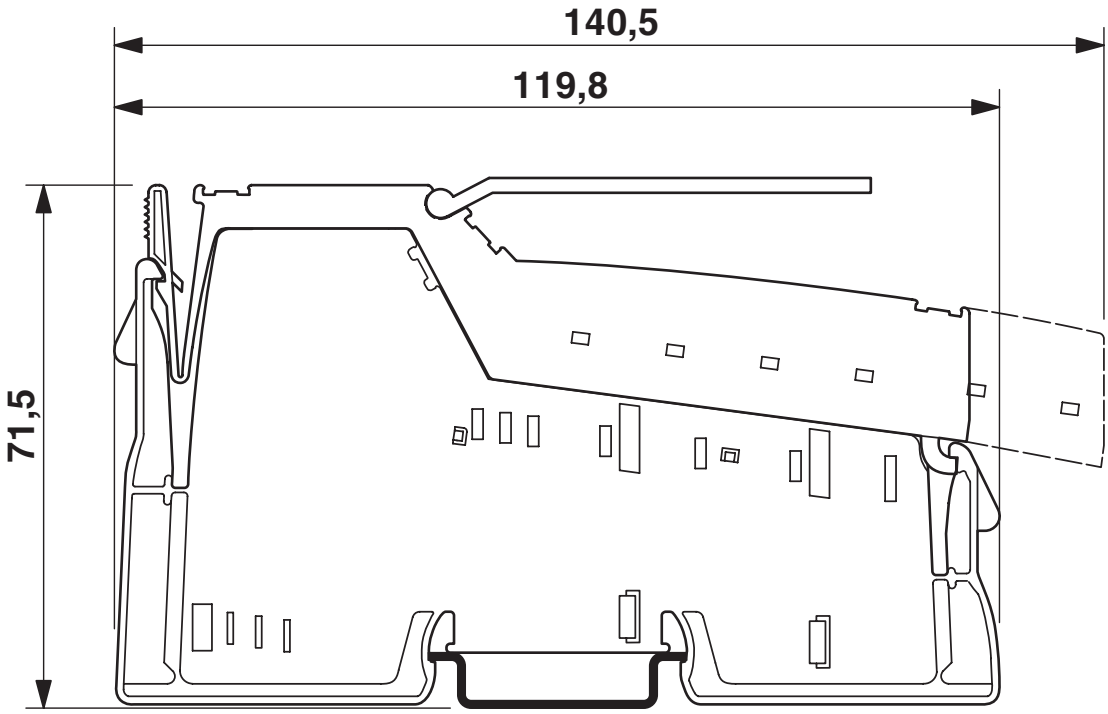

Connection diagram

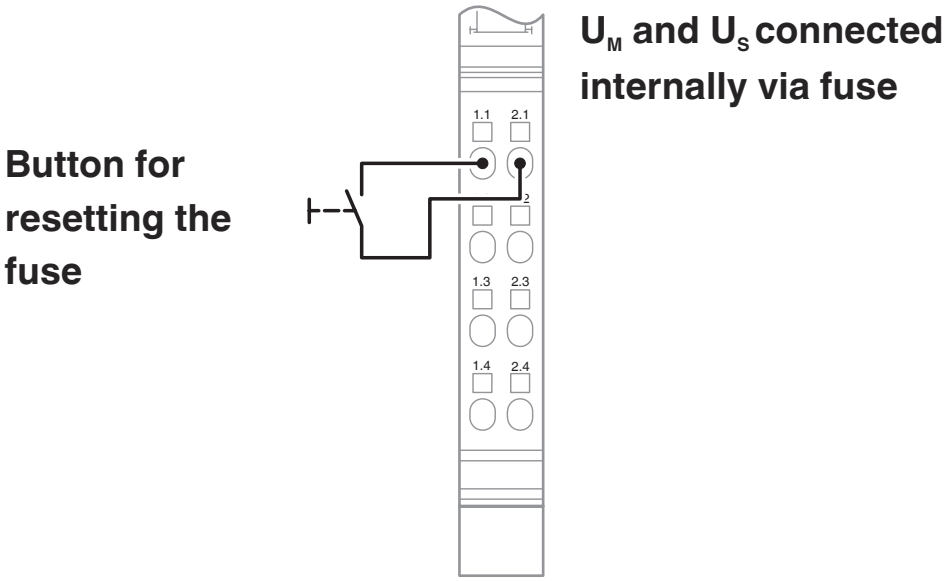

Block diagram

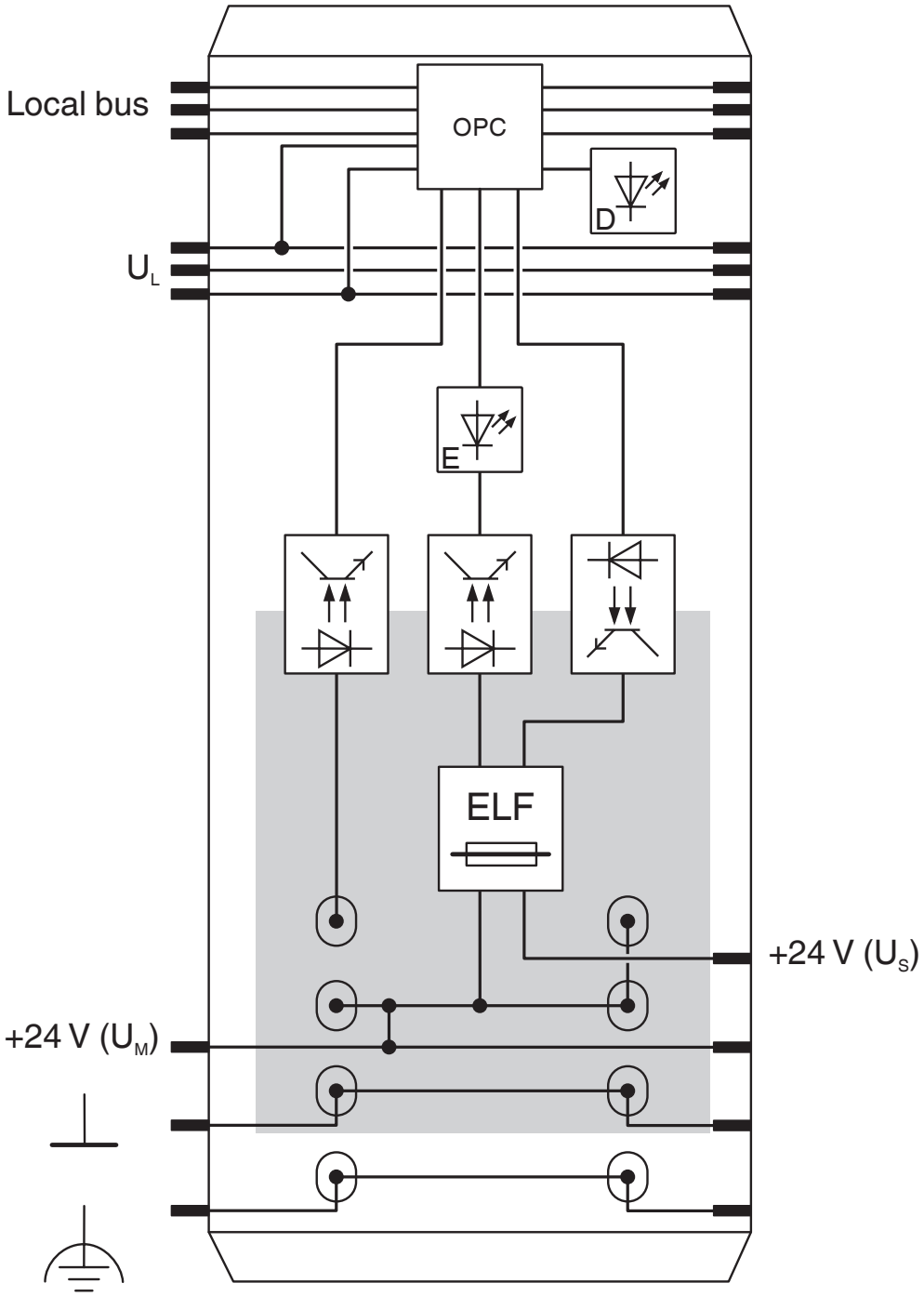

Approvals

To download certificates, visit the product detail page: https://www.phoenixcontact.com/us/products/2861409

cULus Recognized
Approval ID: E140324

cULus Listed
Approval ID: E199827

Classifications

ECLASS

ECLASS-13.0	27242610
ECLASS-15.0	27242610

ETIM

ETIM 10.0	EC001600

UNSPSC

UNSPSC 21.0	32151600

Environmental product compliance

EU RoHS

Fulfills EU RoHS substance requirements	Yes
Exemption	7(a), 7(c)-I

China RoHS

Environment friendly use period (EFUP)	EFUP-50
	An article-related China RoHS declaration table can be found in the download area for the respective article under "Manufacturer declaration". For all articles with EFUP-E, no China RoHS declaration table issued and required.

EU REACH SVHC

REACH candidate substance (CAS No.)	Lead(CAS: 7439-92-1)
SCIP	ca15da44-58e3-4ea9-9a5a-249a05940329

EF3.1 Climate Change

CO2e kg	1.88 kg CO2e

Phoenix Contact 2026 © - all rights reserved
https://www.phoenixcontact.com

Phoenix Contact USA
586 Fulling Mill Road
Middletown, PA 17057, United States
(+717) 944-1300
info@phoenixcon.com