IB IL TEMP 2 UTH-PAC - Temperature module

2861386

https://www.phoenixcontact.com/us/products/2861386

Please be informed that the data shown in this PDF document is generated from our online catalog. Please find the complete data in the user documentation. Our general terms of use for downloads are valid.

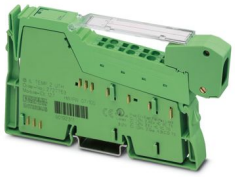

Inline, Temperature measurement terminal, Analog UTH inputs: 2 (Thermocouples or linear voltage), connection technology: 2-conductor, transmission speed in the local bus: 500 kbps, degree of protection: IP20, including Inline connector and labeling field; The product is being prepared for compliance with the Cyber Resilience Act (CRA).

Product description

The terminal is designed for use within an Inline station. This terminal can be used to acquire signals from standard thermocouples. It supports 13 different types of thermocouples according to DIN EN 60584-1 and DIN 43710, as well as a linear voltage input of -15 mV to +85 mV.

Your advantages

- 2 differential inputs for thermocouples or linear voltage
- 1 input for an external cold junction, Pt 1000 or Ni 1000
- The channels are parameterized independently of one another via the bus system
- Internal detection and compensation of cold junction temperature (can be parameterized)
- Absolute and differential temperature measurement (can be parameterized)
- Pt 1000 sensor in the vicinity of the connection terminal blocks of the thermocouple inputs for internal measurement of the cold junction temperature
- Measured values can be represented in three different formats

Commercial data

Item number	2861386
Packing unit	1 pc
Minimum order quantity	1 pc
Sales key	DR01
Product key	DRI143
GTIN	4017918894320
Weight per piece (including packing)	90.6 g
Weight per piece (excluding packing)	67 g
Customs tariff number	85389099
Country of origin	DE

Technical data

Dimensions

Dimensional drawing	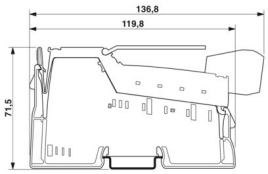
Width	12.2 mm
Height	136.8 mm
Depth	71.5 mm
Note on dimensions	Housing dimensions

Notes

Note on application	Only for industrial use
Note on application	As things stand now, we are preparing the product so that, as of December 11, 2027, it will comply with the requirements of the EU Cyber Resilience Act (CRA) based on the information currently available regarding the CRA.

Utilization restriction

CCCex note	Use in potentially explosive areas is not permitted in China.

Mounting

Mounting type	DIN rail mounting

Material specifications

Color (Housing)	green (RAL 6021)

Interfaces

Inline local bus

Number of interfaces	2
Connection method	Inline data jumper
Transmission speed	500 kbps

System properties

Programming data

Length code (hex)	02
ID code (dec.)	127
Length code (dec)	02
Process data channel	32 bit
Input address area	4 Byte

Output address area	4 Byte
Parameter channel (PCP)	0 Byte
Register length (bus)	32 bit

Fieldbus data telegram (PROFIBUS)

Required parameter data	6 Byte
Required configuration data	4 Byte

Input data

Analog:

Input name	Analog UTH inputs
Description of the input	Inputs for thermocouples or linear voltage
Number of inputs	2 (Thermocouples or linear voltage)
Connection method	Inline connector
Connection technology	2-conductor
Note regarding the connection technology	Shielded compensating line for TC with encapsulated sensors
A/D conversion time	typ. 120 µs (per channel)
Sensor types that can be used (TC)	U, T, L, J, E, K, N, S, R, B, C, W, HK
Tolerance, relative	see tables for tolerance values
Tolerance, absolute	typ. ± 0.6 K (Sensor type K)
	see tables for tolerance values
Measuring principle	Successive approximation
Measured value representation	16 bits (15 bits + sign bit)
Process data update	max. 30 ms (For both channels)
Protective circuit	Surge protection (TC channels); up to ±40 V

Product properties

Product type	I/O component
Product family	Inline
Type	modular
Installation location	Control cabinet
Scope of supply	including Inline connector and labeling field
Operating mode	Process data operation with 2 words
Special properties	The product is being prepared for compliance with the Cyber Resilience Act (CRA)
Diagnostics messages	Failure of the internal I/O supply I/O error message sent to the bus coupler
	Failure of or insufficient communications power U_L I/O error message sent to the bus coupler
	I/O error Error message in the process data
	User error Error message in the process data

Insulation characteristics

Overvoltage category	II (IEC 60664-1, EN 60664-1)
Pollution degree	2 (IEC 60664-1, EN 60664-1)

Electrical properties

Maximum power dissipation for nominal condition	0.9 W

Potentials: Communications power (U_L)

Supply voltage	7.5 V DC (via voltage jumper)
Current draw	max. 60 mA
	typ. 43 mA

Potentials: Supply of analog modules (U_{ANA})

Supply voltage	24 V DC (via voltage jumper)
Supply voltage range	19.2 V DC ... 30 V DC (including all tolerances, including ripple)
Current draw	max. 18 mA
	typ. 11 mA

Electrical isolation/isolation of the voltage ranges

Test voltage: 7.5 V supply (bus logics)/24 V analog supply (analog I/O)	500 V AC, 50 Hz, 1 min
Test voltage: 7.5 V supply (bus logic)/functional ground	500 V AC, 50 Hz, 1 min
Test voltage: 24 V analog supply (analog I/O)/functional ground	500 V AC, 50 Hz, 1 min

Connection data

Connection technology

Connection name	Inline connector

Inline connector

Connection method	Spring-cage connection
Conductor cross-section, rigid	0.08 mm² ... 1.5 mm²
Conductor cross-section, flexible	0.08 mm² ... 1.5 mm²
Conductor cross-section AWG	28 ... 16
Stripping length	8 mm

Environmental and real-life conditions

Ambient conditions

Ambient temperature (operation)	-25 °C ... 55 °C
Degree of protection	IP20
Air pressure (operation)	70 kPa ... 106 kPa (up to 3000 m above sea level)
Air pressure (storage/transport)	70 kPa ... 106 kPa (up to 3000 m above sea level)
Ambient temperature (storage/transport)	-25 °C ... 85 °C
Permissible humidity (operation)	10 % ... 95 % (non-condensing)
Permissible humidity (storage/transport)	10 % ... 95 % (non-condensing)

Mechanical test

Vibration resistance in accordance with EN 60068-2-6/IEC 60068-2-6	5g
Shock in accordance with EN 60068-2-27/IEC 60068-2-27	25g

Standards and regulations

Protection class	III (IEC 61140, EN 61140, VDE 0140-1)

Drawings

Dimensional drawing

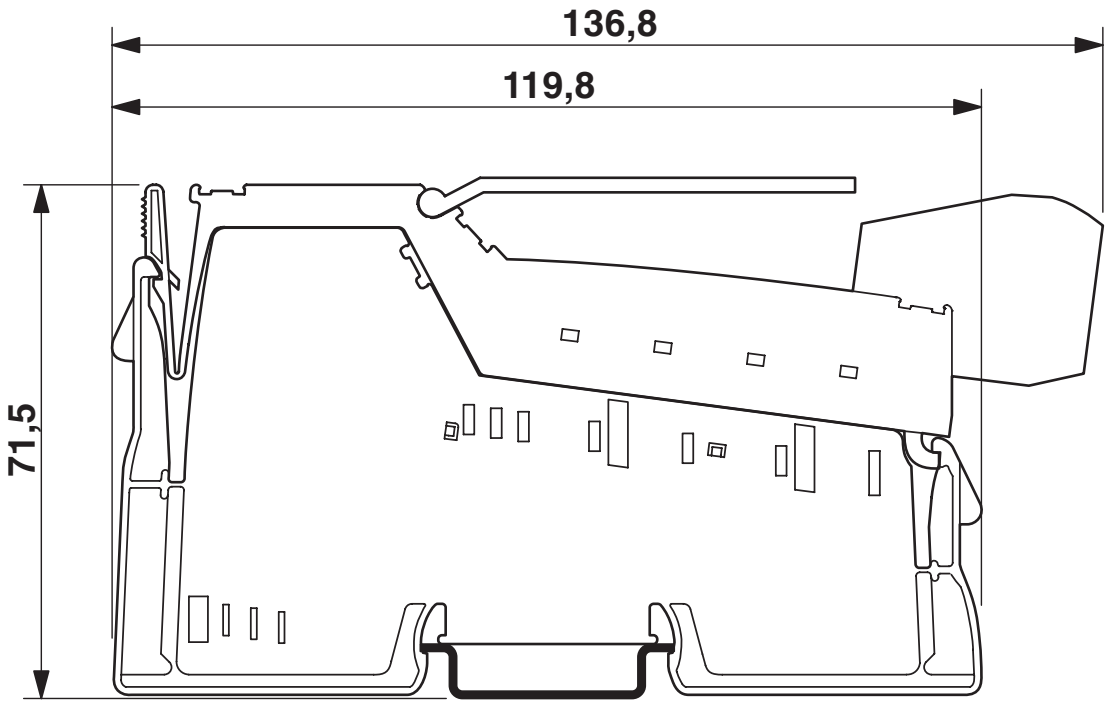

Connection diagram

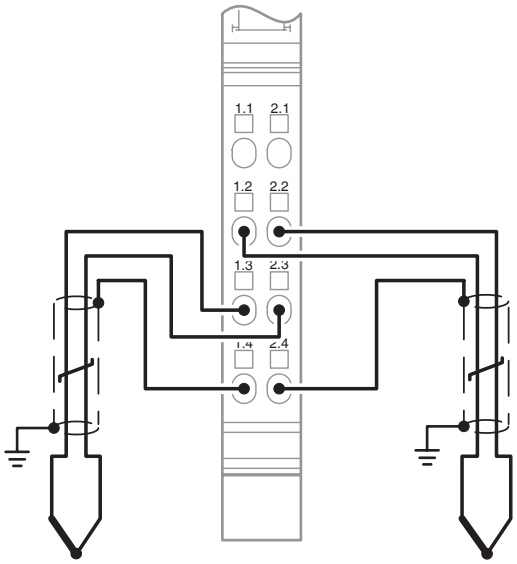

Connection example

Block diagram

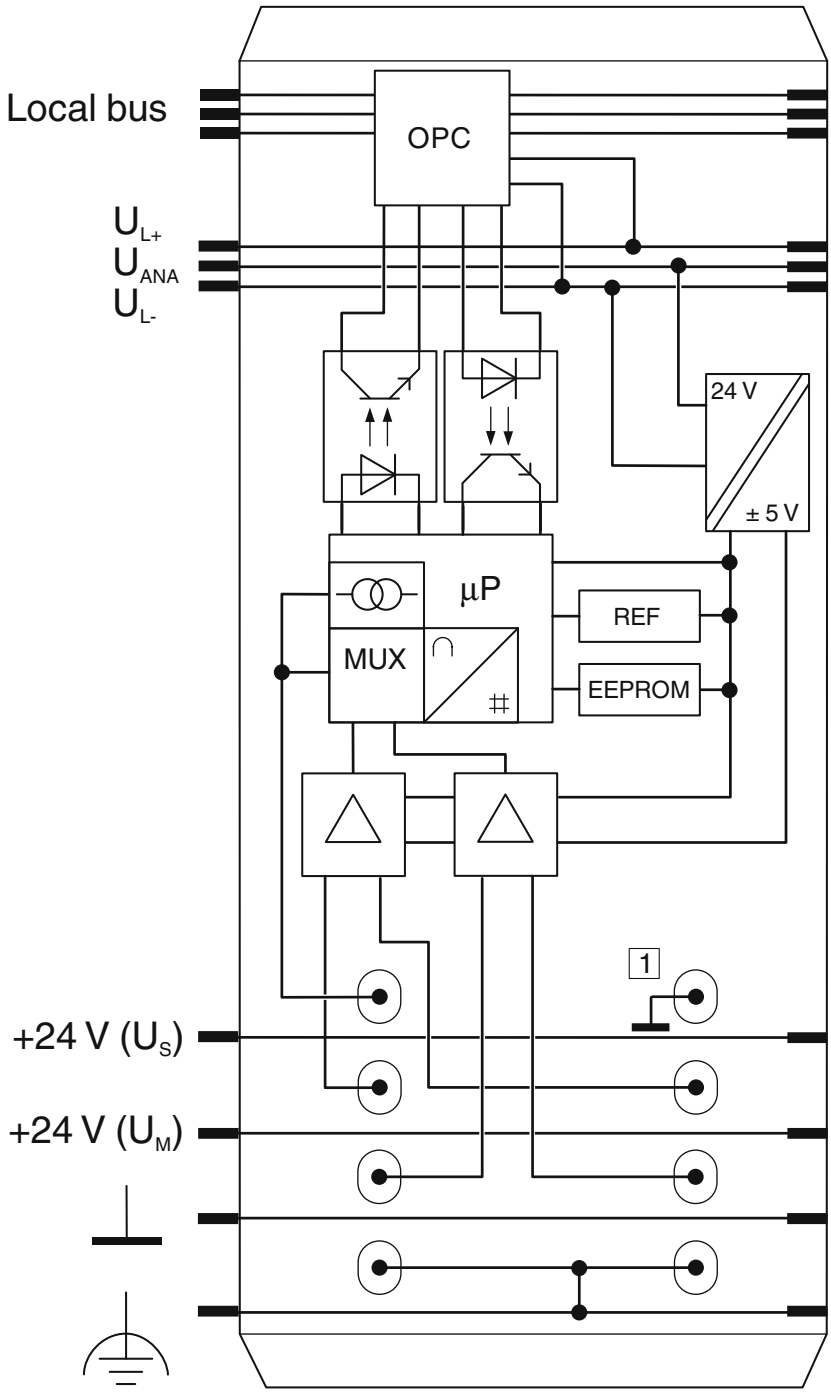

Internal wiring of the terminal points

Approvals

To download certificates, visit the product detail page: https://www.phoenixcontact.com/us/products/2861386

BSH
Approval ID: 658a

RINA
Approval ID: ELE121121XG

ABS
Approval ID: 22-2226444-PDA

cULus Recognized
Approval ID: E140324

LR
Approval ID: LR23398855TA

cULus Listed
Approval ID: E199827

Classifications

ECLASS

ECLASS-13.0	27242601
ECLASS-15.0	27242601

ETIM

ETIM 10.0	EC001596

UNSPSC

UNSPSC 21.0	32151600

Environmental product compliance

EU RoHS

Fulfills EU RoHS substance requirements	Yes
Exemption	7(a), 7(c)-I

China RoHS

Environment friendly use period (EFUP)	EFUP-50
	An article-related China RoHS declaration table can be found in the download area for the respective article under "Manufacturer declaration". For all articles with EFUP-E, no China RoHS declaration table issued and required.

EU REACH SVHC

REACH candidate substance (CAS No.)	Lead(CAS: 7439-92-1)
SCIP	3f230d41-61c2-4b4e-bc0d-e9e6b00a8c18

EF3.1 Climate Change

CO2e kg	8.162 kg CO2e

Phoenix Contact 2026 © - all rights reserved
https://www.phoenixcontact.com

Phoenix Contact USA
586 Fulling Mill Road
Middletown, PA 17057, United States
(+717) 944-1300
info@phoenixcon.com