IB IL 24 DO 4-PAC - Digital module

2861276

https://www.phoenixcontact.com/us/products/2861276

Please be informed that the data shown in this PDF document is generated from our online catalog. Please find the complete data in the user documentation. Our general terms of use for downloads are valid.

CRA-READY



Inline, Digital output terminal, Digital outputs: 4, 24 V DC, 500 mA, connection technology: 3-conductor, transmission speed in the local bus: 500 kbps, degree of protection: IP20, including Inline connector and labeling field; The product is being prepared for compliance with the Cyber Resilience Act (CRA).

Product description

The terminal is designed for use within an Inline station. It is used to output digital signals.

Your advantages

- 4 digital outputs
- Connection of actuators in 2- and 3-conductor technology
- Nominal current per output: 500 mA
- Total current of the terminal: 2 A
- Short-circuit and overload-protected outputs

ELEKTROGERÄTE RÜCKNAHME

Commercial data

Item number	2861276
Packing unit	1 pc
Minimum order quantity	1 pc

Sales key	DR01
Product key	DRI132
GTIN	4017918894214
Weight per piece (including packing)	83 g
Weight per piece (excluding packing)	66 g
Customs tariff number	85389099
Country of origin	DE

Technical data

Dimensions

Dimensional drawing	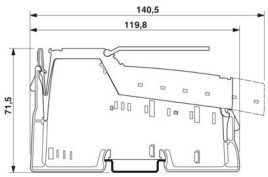
Width	12.2 mm
Height	140.5 mm
Depth	71.5 mm
Note on dimensions	Housing dimensions

Notes

Note on application	Only for industrial use
Note on application	As things stand now, we are preparing the product so that, as of December 11, 2027, it will comply with the requirements of the EU Cyber Resilience Act (CRA) based on the information currently available regarding the CRA.

Utilization restriction

CCCex note	Use in potentially explosive areas is not permitted in China.

Mounting

Mounting type	DIN rail mounting

Material specifications

Color (Housing)	green (RAL 6021)

Interfaces

Inline local bus

Number of interfaces	2
Connection method	Inline data jumper
Transmission speed	500 kbps

System properties

Programming data

Length code (hex)	41
ID code (dec.)	189
Length code (dec)	65
Process data channel	4 bit
Input address area	0 bit

Output address area	4 bit
Parameter channel (PCP)	0 bit
Register length (bus)	4 bit

Fieldbus data telegram (PROFIBUS)

Required parameter data	3 Byte
Required configuration data	4 Byte

Output data

Digital:

Output name	Digital outputs
Design of digital output	Semiconductor
Connection method	Spring-cage connection
Connection technology	3-conductor
Number of outputs	4
Protective circuit	Overload protection, short-circuit protection; electronic
Output voltage	24 V DC (U_S - 1 V)
Limitation of the voltage induced on circuit interruption	-46 V ... -15 V
Maximum inrush current	max. 1.5 A (for 20 ms)
Output current	max. 500 mA (per channel)
	max. 2 A (Device)
Nominal output voltage	24 V DC
Switching power with ground connection interrupt	typ. 100 mW (at 1 kΩ load resistance)
Output voltage when switched off	max. 2 V
Output current when switched off	max. 300 µA
Nominal load, inductive	12 VA (1.2 H, 50 Ω)
Nominal load, lamp	12 W
Nominal load, ohmic	12 W (48 Ω)
Signal delay when switching off an inductive nominal load	typ. 50 ms (1.2 H, 50 Ω)
Signal delay when switching off a lamp nominal load	typ. 1 ms
Signal delay when switching off an ohmic nominal load	typ. 1 ms
Signal delay when switching on an inductive nominal load	typ. 100 ms (1.2 H, 50 Ω)
Signal delay when switching on a lamp nominal load	typ. 100 ms (for switching frequencies up to 8 Hz, above this frequency, the lamp load behaves like an ohmic load)
Signal delay when switching on an ohmic nominal load	typ. 100 µs
Maximum operating frequency with inductive nominal load	max. 0.5 Hz (1.2 H, 50 Ω)
Maximum operating frequency with lamp nominal load	max. 300 Hz (this switching frequency is limited by the data rate selected, the number of bus devices, the structure of the bus, the software used and the control or computer system used)
Maximum operating frequency with ohmic nominal load	max. 300 Hz (this switching frequency is limited by the data rate selected, the number of bus devices, the structure of the bus, the software used and the control or computer system used)
Reaction time with short-circuit	ca. 850 ms
Reaction time with ohmic overload	ca. 3 s
Restart frequency with lamp overload	250 Hz

Restart frequency with ohmic overload	250 Hz
Behavior with overload	Auto restart
Behavior with inductive overload	Output can be destroyed
Behavior at voltage switch-off	The output follows the power supply without delay
Output data validity	typ. 5 ms (after switching the 24 V voltage supply (power up))
One-time unsolicited energy	400 mJ
Reverse voltage resistance to short pulses	Reverse voltage proof
Resistance to permanent reverse voltage	max. 2 A DC
Resistance to permanently applied surge voltage	no
Overcurrent shut-down	min. 0.7 A
Output current with ground connection interrupt when switched off	max. 25 mA

Product properties

Product type	I/O component
Product family	Inline
Type	modular
Scope of supply	including Inline connector and labeling field
No. of channels	4
Operating mode	Process data operation with 4 bits
Special properties	The product is being prepared for compliance with the Cyber Resilience Act (CRA)
Diagnostics messages	Short-circuit or overload of the digital outputs Error message in the diagnostic code (bus) and display (2 Hz) via the LED (D) on the module

Insulation characteristics

Overvoltage category	II (IEC 60664-1, EN 60664-1)
Pollution degree	2 (IEC 60664-1, EN 60664-1)

Electrical properties

Maximum power dissipation for nominal condition	1.15 W

Potentials: Communications power (U_L)

Supply voltage	7.5 V DC (via voltage jumper)
Current draw	max. 44 mA

Potentials: Segment circuit supply (U_S)

Supply voltage	24 V DC (via voltage jumper)
Supply voltage range	19.2 V DC ... 30 V DC (including all tolerances, including ripple)
Current draw	max. 2 A

Electrical isolation/isolation of the voltage ranges

Test voltage: 7.5 V supply (bus logics)/24 V supply (I/O)	500 V AC, 50 Hz, 1 min
Test voltage: 7.5 V supply (bus logic)/functional ground	500 V AC, 50 Hz, 1 min
Test voltage: 24 V supply (I/O) / functional ground	500 V AC, 50 Hz, 1 min

Connection data

Connection technology

Connection name	Inline connector

Inline connector

Connection method	Spring-cage connection
Conductor cross-section, rigid	0.08 mm² ... 1.5 mm²
Conductor cross-section, flexible	0.08 mm² ... 1.5 mm²
Conductor cross-section AWG	28 ... 16
Stripping length	8 mm

Environmental and real-life conditions

Ambient conditions

Ambient temperature (operation)	-25 °C ... 55 °C
Degree of protection	IP20
Air pressure (operation)	70 kPa ... 106 kPa (up to 3000 m above sea level)
Air pressure (storage/transport)	70 kPa ... 106 kPa (up to 3000 m above sea level)
Ambient temperature (storage/transport)	-25 °C ... 85 °C
Permissible humidity (operation)	10 % ... 95 % (non-condensing)
Permissible humidity (storage/transport)	10 % ... 95 % (non-condensing)

Mechanical test

Vibration resistance in accordance with EN 60068-2-6/IEC 60068-2-6	5g
Shock in accordance with EN 60068-2-27/IEC 60068-2-27	25g

Standards and regulations

Protection class	III (IEC 61140, EN 61140, VDE 0140-1)

Drawings

Dimensional drawing

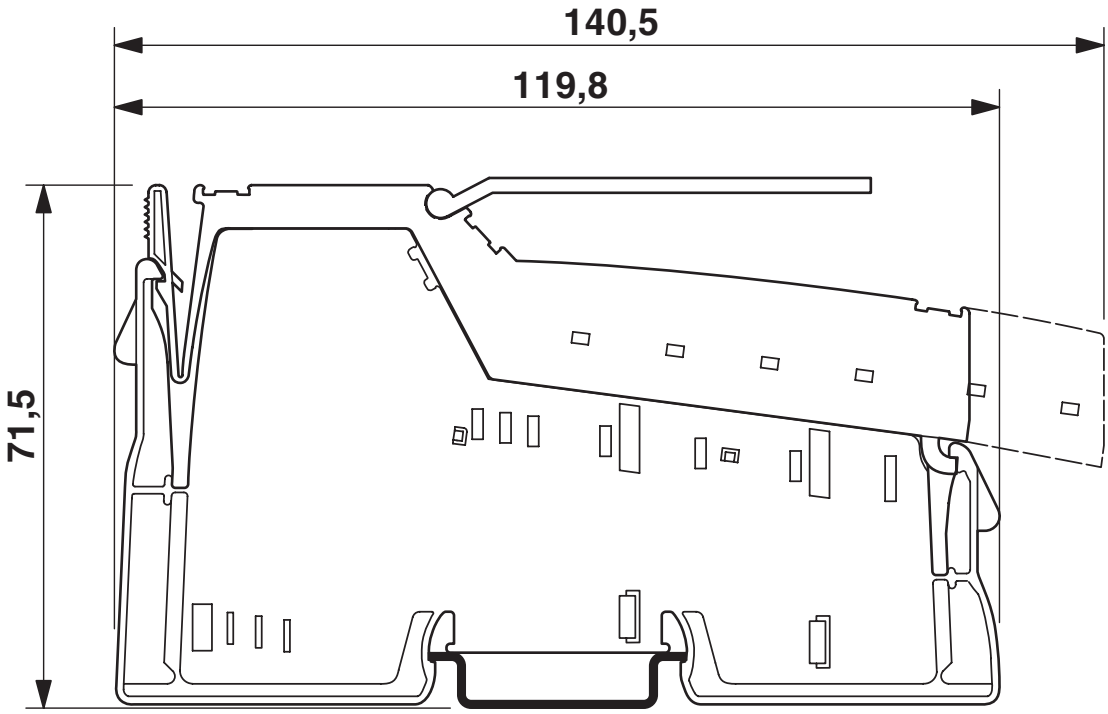

Connection diagram

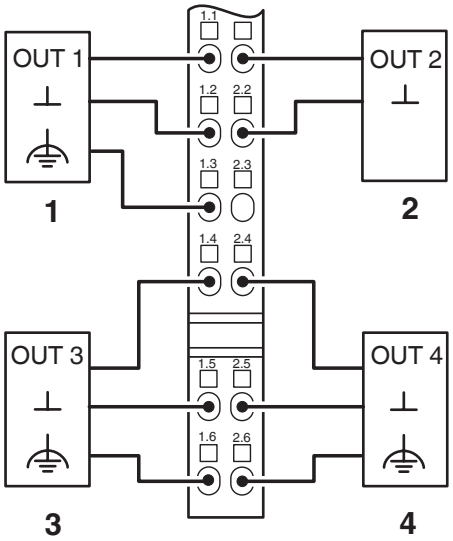

Block diagram

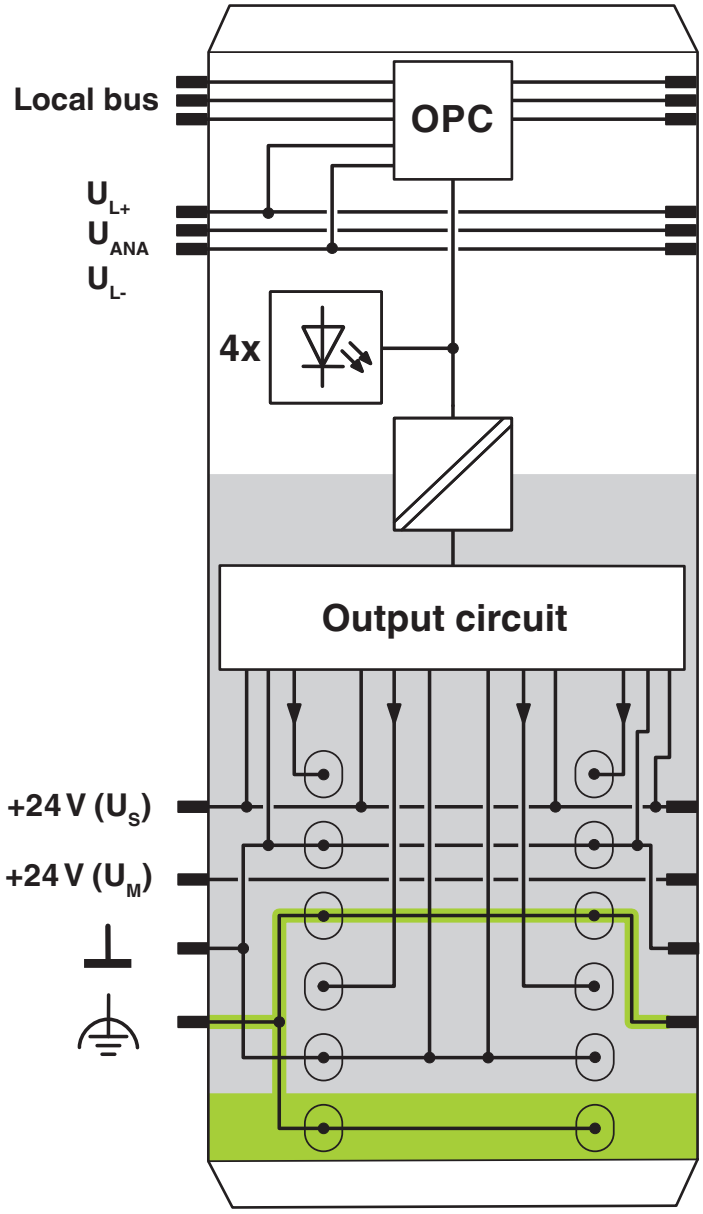

Internal wiring of the terminal points

Approvals

To download certificates, visit the product detail page: https://www.phoenixcontact.com/us/products/2861276

BSH
Approval ID: 658a

RINA
Approval ID: ELE121121XG

ABS
Approval ID: 22-2226444-PDA

cULus Recognized
Approval ID: E140324

LR
Approval ID: LR23398855TA

cULus Listed
Approval ID: E199827

Classifications

ECLASS

ECLASS-13.0	27242604
ECLASS-15.0	27242604

ETIM

ETIM 10.0	EC001599

UNSPSC

UNSPSC 21.0	32151600

Environmental product compliance

EU RoHS

Fulfills EU RoHS substance requirements	Yes
Exemption	7(a), 7(c)-I

China RoHS

Environment friendly use period (EFUP)	EFUP-50
	An article-related China RoHS declaration table can be found in the download area for the respective article under "Manufacturer declaration". For all articles with EFUP-E, no China RoHS declaration table issued and required.

EU REACH SVHC

REACH candidate substance (CAS No.)	Lead(CAS: 7439-92-1)
SCIP	3fd35456-0b80-4f99-8a74-5b6bc591ce0c

EF3.1 Climate Change

CO2e kg	2.137 kg CO2e

Phoenix Contact 2026 © - all rights reserved
https://www.phoenixcontact.com

Phoenix Contact USA
586 Fulling Mill Road
Middletown, PA 17057, United States
(+717) 944-1300
info@phoenixcon.com