D-LAN-CAT.5E - Surge protection device

2858991

https://www.phoenixcontact.com/us/products/2858991

Please be informed that the data shown in this PDF document is generated from our online catalog. Please find the complete data in the user documentation. Our general terms of use for downloads are valid.



Fine surge protection in accordance with Class D (CAT.5e), for token ring and Ethernet. RJ45 attachment plug with separate grounding cable, incl. RJ45 cable

Commercial data

Item number	2858991
Packing unit	1 pc
Minimum order quantity	1 pc
Sales key	CL24
Product key	CL3111
GTIN	4017918920463
Weight per piece (including packing)	135.8 g
Weight per piece (excluding packing)	135 g
Customs tariff number	85363010
Country of origin	DE

Technical data

Product properties

Product type	Surge protection for information technology
Product family	DATATRAB
IEC test classification	C1
	C2
	C3
	B2
	B3
VDE requirement class	C1
	C2
	C3
	B2
	B3
Type	Intermediate plug
Surge protection fault message	none

Insulation characteristics

Overvoltage category	II
Pollution degree	2

Connection data

Connection method	RJ45

Dimensions

Dimensional drawing	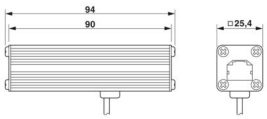
Width	25.4 mm
Height	94 mm
Depth	25.4 mm

Material specifications

Color	black (RAL 9005)
Housing material	Aluminum, anodized

Mechanical properties

Mechanical data

Open side panel	No

Protective circuit

Direction of action	Line-Line & Line-Shield & Shield-Earth Ground
Maximum continuous operating voltage U_C	± 7 V DC
Rated current	1.5 A (25 °C)
Operating effective current I_C at U_C	≤ 100 µA
Protective conductor current I_{PE}	≤ 100 µA
Nominal discharge current I_n (8/20) µs (line-line)	350 A
Nominal discharge current I_n (8/20) µs (line-ground)	2.5 kA
Max. discharge current I_{max} (8/20) µs maximum (line-earth)	2.5 kA (in total)
Nominal pulse current Ian (10/700) µs (line-line)	160 A
Nominal pulse current Ian (10/700) µs (line-earth)	160 A
Output voltage limitation at 1 kV/µs (line-line) spike	≤ 22 V
Output voltage limitation at 1 kV/µs (line-earth) spike	≤ 80 V (equipotential bonding lead: 1 m)
Output voltage limitation at 1 kV/µs (shield-ground) spike	≤ 700 V (equipotential bonding lead: 1 m)
Residual voltage at I_n (conductor-conductor)	≤ 45 V
Residual voltage at I_n (conductor-ground)	≤ 45 V
Residual voltage at I_n (shield-ground)	≤ 700 V
Voltage protection level U_p (line-line)	≤ 50 V (C1 - 500 V / 250 A)
	≤ 20 V (B3 - 2 kV / 25 A)
Voltage protection level U_p (line-earth)	≤ 65 V (C1, 500 V/250 A - PA-Ltg: 1 m)
	≤ 25 V (B3 - 2 kV / 25 A - PA-Ltg: 1 m)
	≤ 60 V (C3, 7 kV/90 A - PA-Ltg: 1 m)
Voltage protection level U_p (shield-ground)	≤ 850 V (C2 - 4 kV/2 kA - PA-Ltg: 1 m)
Response time t_A (line-line)	≤ 500 ns
Response time t_A (line-earth)	≤ 100 ns
Input attenuation aE, sym.	1 dB (up to 100 MHz, 100 Ω system)
Near-end crosstalk attenuation	36 dB (pair 3-6 against pair 4-5 in 100 Ω system / 100 MHz)
	40 dB (all other pair combinations in 100 Ω system/100 MHz)
Cut-off frequency fg (3 dB), sym. in 100 Ω system	≤ 100 MHz
Capacity (Core-Core)	20 pF (typical)
Capacity (Core-Earth)	1 pF (typical)
Surge protection fault message	none
Impulse durability (line-line)	B2 - 4 kV / 100 A
	B3 - 2 kV / 25 A
	C1 - 500 V / 250 A
Impulse durability (line-earth)	B2 - 4 kV / 100 A
	C1 - 500 V / 250 A
	C2 - 4 kV / 2 kA
	B3 - 2 kV / 25 A

Environmental and real-life conditions

Ambient conditions

Degree of protection	IP20
Ambient temperature (operation)	-40 °C ... 80 °C

Standards and regulations

VDE requirement class	C1
	C2
	C3
	B2
	B3

Standards Information technology specification

Standards/regulations	IEC 61643-21
	E VDE 0845-3-1
	DIN EN 50173-1
	IEC 61643-21
	E VDE 0845-3-1
	DIN EN 50173-1

Air clearances and creepage distances

Standards/regulations	DIN VDE 0110-1 / IEC 60664-1

Mounting

Mounting type	Connection-specific intermediate plugging

Drawings

Dimensional drawing

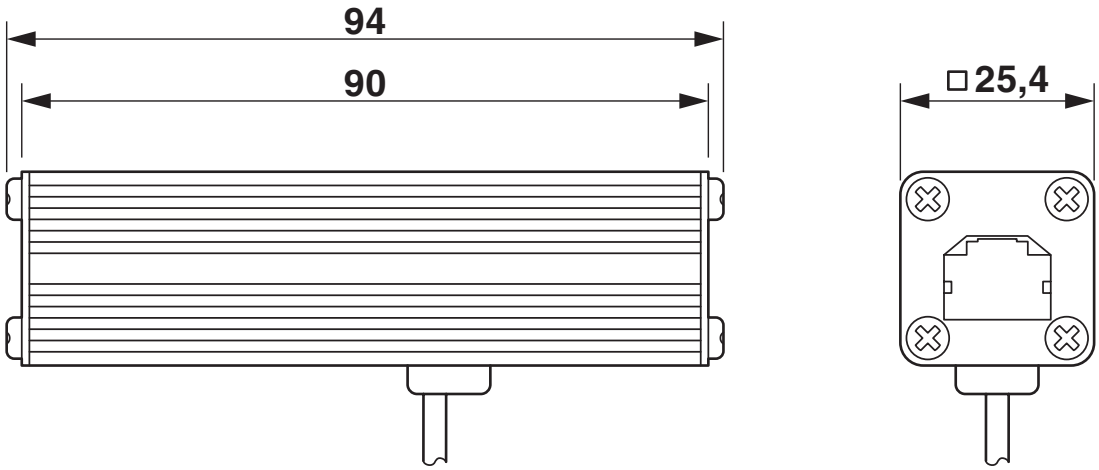

Circuit diagram

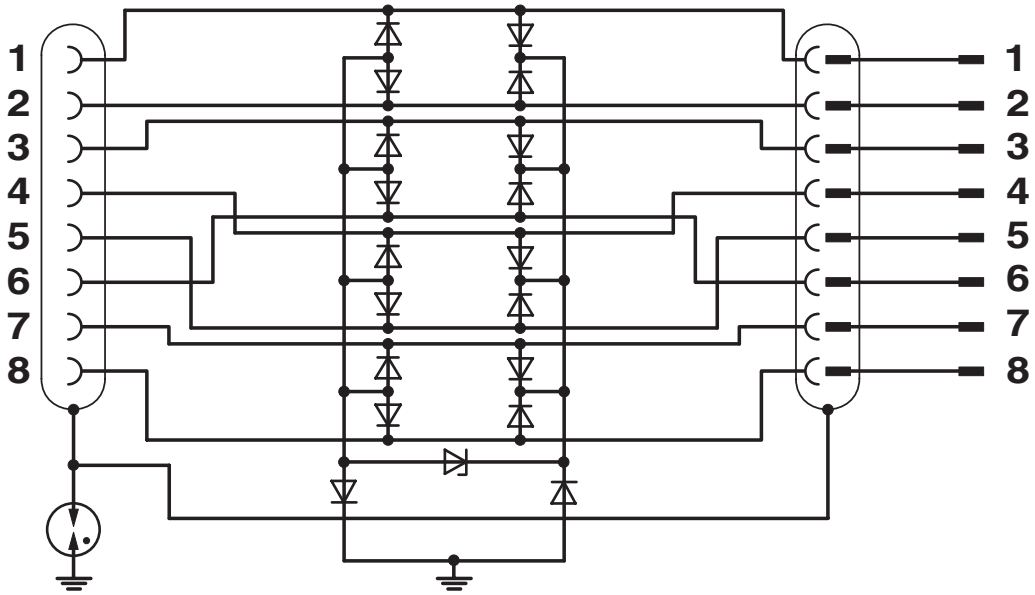

Approvals

To download certificates, visit the product detail page: https://www.phoenixcontact.com/us/products/2858991

UL Listed
Approval ID: FILE E 138168

Classifications

ECLASS

ECLASS-13.0	27171503
ECLASS-15.0	27171503

ETIM

ETIM 10.0	EC001466

UNSPSC

UNSPSC 21.0	39121600

Environmental product compliance

EU RoHS

Fulfills EU RoHS substance requirements	Yes
Exemption	7(a), 7(c)-I

China RoHS

Environment friendly use period (EFUP)	EFUP-50
	An article-related China RoHS declaration table can be found in the download area for the respective article under "Manufacturer declaration". For all articles with EFUP-E, no China RoHS declaration table issued and required.

EU REACH SVHC

REACH candidate substance (CAS No.)	Lead(CAS: 7439-92-1)
SCIP	5560daf8-02ad-477f-8264-22d6d2558977

Phoenix Contact 2026 © - all rights reserved
https://www.phoenixcontact.com

Phoenix Contact USA
586 Fulling Mill Road
Middletown, PA 17057, United States
(+717) 944-1300
info@phoenixcon.com