CN-UB/MP - Mounting panel

2818135

https://www.phoenixcontact.com/us/products/2818135

Please be informed that the data shown in this PDF document is generated from our online catalog. Please find the complete data in the user documentation. Our general terms of use for downloads are valid.

Tongue for attaching the CN-UB..., to housing panels, for example.



Commercial data

Item number	2818135
Packing unit	10 pc
Minimum order quantity	1 pc
Sales key	CL25
Product key	CL331Z
GTIN	4017918148362
Weight per piece (including packing)	20.75 g
Weight per piece (excluding packing)	17.793 g
Customs tariff number	73269098
Country of origin	DE

Technical data

Product properties

Product type	Assembly adapter

Material specifications

Color	silver-colored
	copper color

Mounting

Mounting type	Panel mounting

Drawings

Dimensional drawing

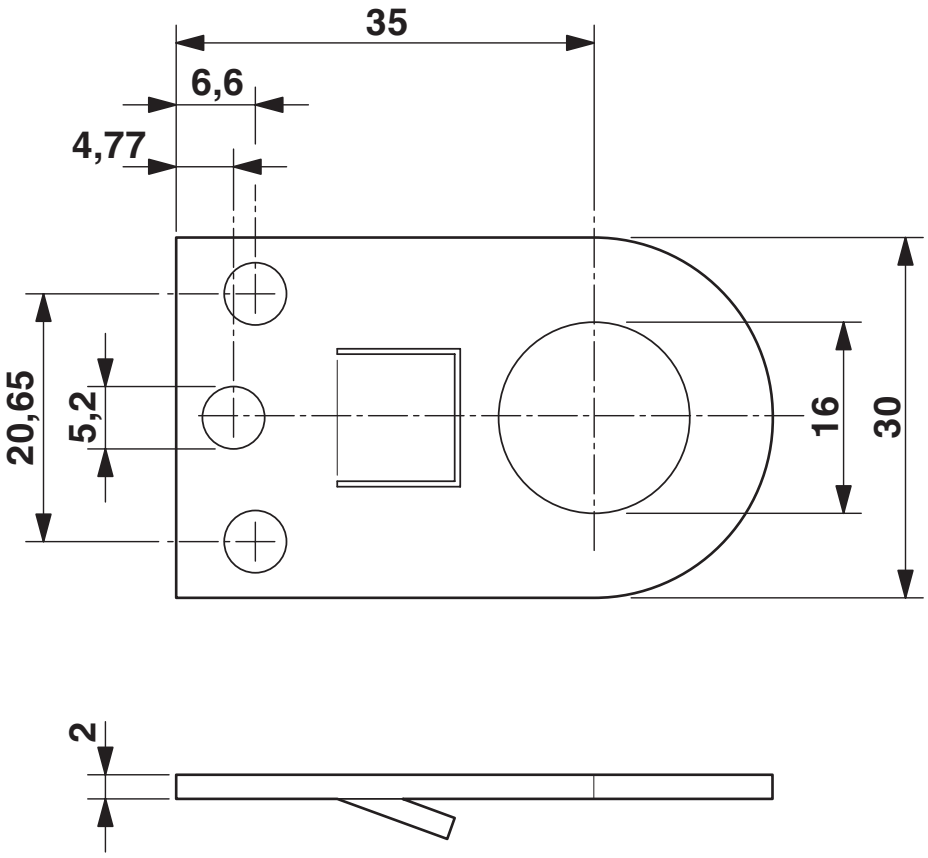

Classifications

ECLASS

ECLASS-13.0	27171592
ECLASS-15.0	27171592

ETIM

ETIM 10.0	EC002497

UNSPSC

UNSPSC 21.0	39121600

Environmental product compliance

EU RoHS

Fulfills EU RoHS substance requirements	Yes, No exemptions

China RoHS

Environment friendly use period (EFUP)	EFUP-E
	No hazardous substances above the limits

EU REACH SVHC

REACH candidate substance (CAS No.)	No substance above 0.1 wt%

EF3.1 Climate Change

CO2e kg	0.173 kg CO2e

Phoenix Contact 2026 © - all rights reserved
https://www.phoenixcontact.com

Phoenix Contact USA
586 Fulling Mill Road
Middletown, PA 17057, United States
(+717) 944-1300
info@phoenixcon.com