PT-IQ-PTB-PT - Supply and remote module

2801296

https://www.phoenixcontact.com/us/products/2801296

Please be informed that the data shown in this PDF document is generated from our online catalog. Please find the complete data in the user documentation. Our general terms of use for downloads are valid.





Module for power supply and multi-stage, floating remote signaling of connected surge protection modules.

Your advantages

- Predictive monitoring with 3-stage LED display
- Integration of the status message into the system controller via group remote signaling
- Install quickly and error-free with DIN rail connectors
- Supply of up to 28 protective devices due to high feed-in power
- Maximum protection for MCR applications with high discharge capacity

ELEKTROGERÄTE RÜCKNAHME

Commercial data

Item number	2801296
Packing unit	1 pc
Minimum order quantity	1 pc
Sales key	CL22
Product key	CL2153
GTIN	4046356766760

Weight per piece (including packing)	121.5 g
Weight per piece (excluding packing)	117.6 g
Customs tariff number	85363030
Country of origin	DE

Technical data

Notes

General

Note	Remote signaling as well as the power supply of the DIN rail connector are established by snapping the module into place on the DIN rail connector.

Product properties

Product type	Surge protection for MCR technology
Product family	PLUGTRAB IQ
Type	DIN rail module, two-section, divisible

Insulation characteristics

Overvoltage category	II
Pollution degree	2

Electrical properties

Indicator/remote signaling

Switching function	2x N/C contacts

Supply: Status indicator/remote signaling

Operating voltage	20 V DC ... 30 V DC
Rated current	max. 130 mA (24 V DC)
	max. 160 mA (20 V DC)
Max. required back-up fuse	500 mA (T)
Number of surge protection modules that can be mounted side by side	28 (32 °C)

Connection data

Connection method	Push-in connection
Conductor cross-section flexible	0.2 mm² ... 2.5 mm²
Conductor cross-section rigid	0.2 mm² ... 4 mm²
Conductor cross-section AWG	24 ... 12

Dimensions

Dimensional drawing	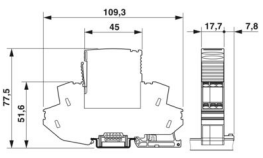
Width	17.7 mm
Height	109.3 mm
Depth	77.5 mm (incl. DIN rail 7.5 mm)

Horizontal pitch	1 HP

Material specifications

Color	black (RAL 9005)
Flammability rating according to UL 94	V-0
Housing material	PA 6.6

Mechanical properties

Mechanical data

Open side panel	No

Protective circuit

Surge protection fault message	Optical, multi-stage remote indication contact

Environmental and real-life conditions

Ambient conditions

Degree of protection	IP20
Ambient temperature (operation)	-40 °C ... 70 °C
Ambient temperature (storage/transport)	-40 °C ... 85 °C
Altitude	≤ 4000 m (amsl)

Standards and regulations

Standards/specifications	EN 61000-6-2
Note	2005
Standards/specifications	EN 61000-6-3
Note	2007 + A1:2011
Standards/specifications	EN 60950-1
Note	2006 + A2:2013

Mounting

Mounting type	DIN rail: 35 mm

Drawings

Dimensional drawing

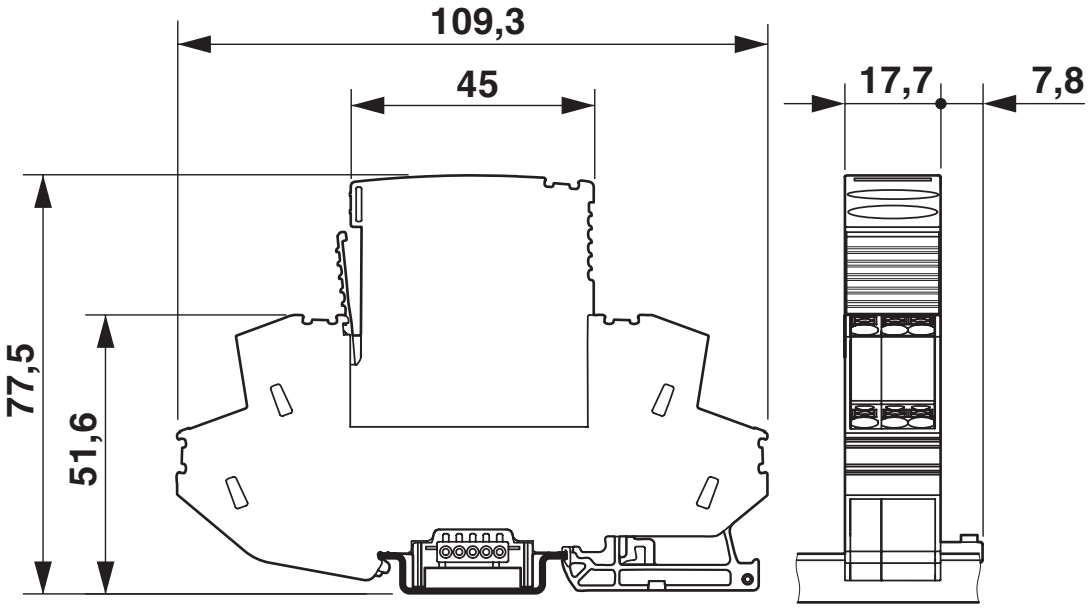

Application drawing

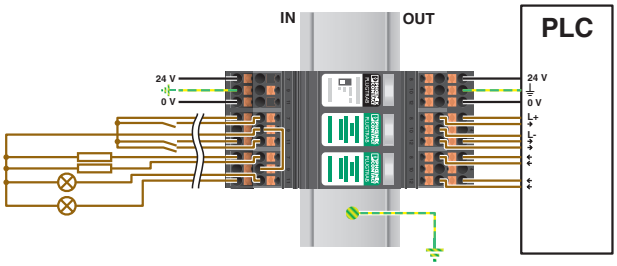

Application drawing

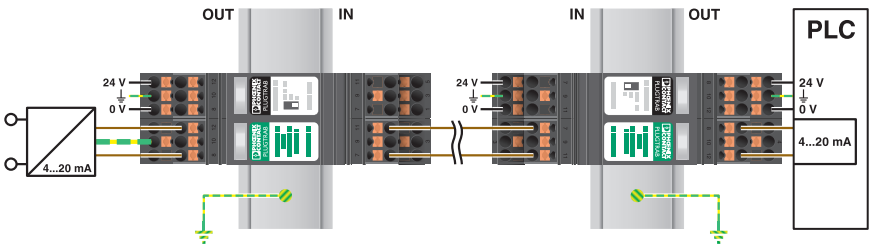

Application drawing

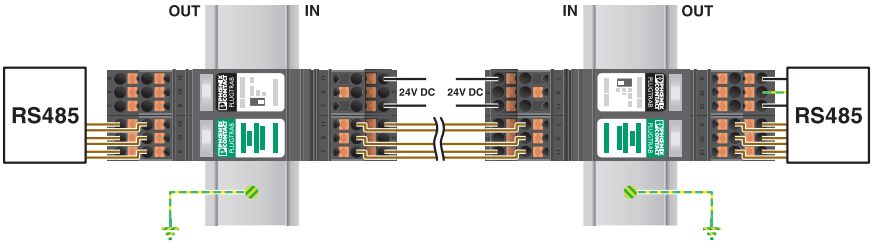

Schematic diagram

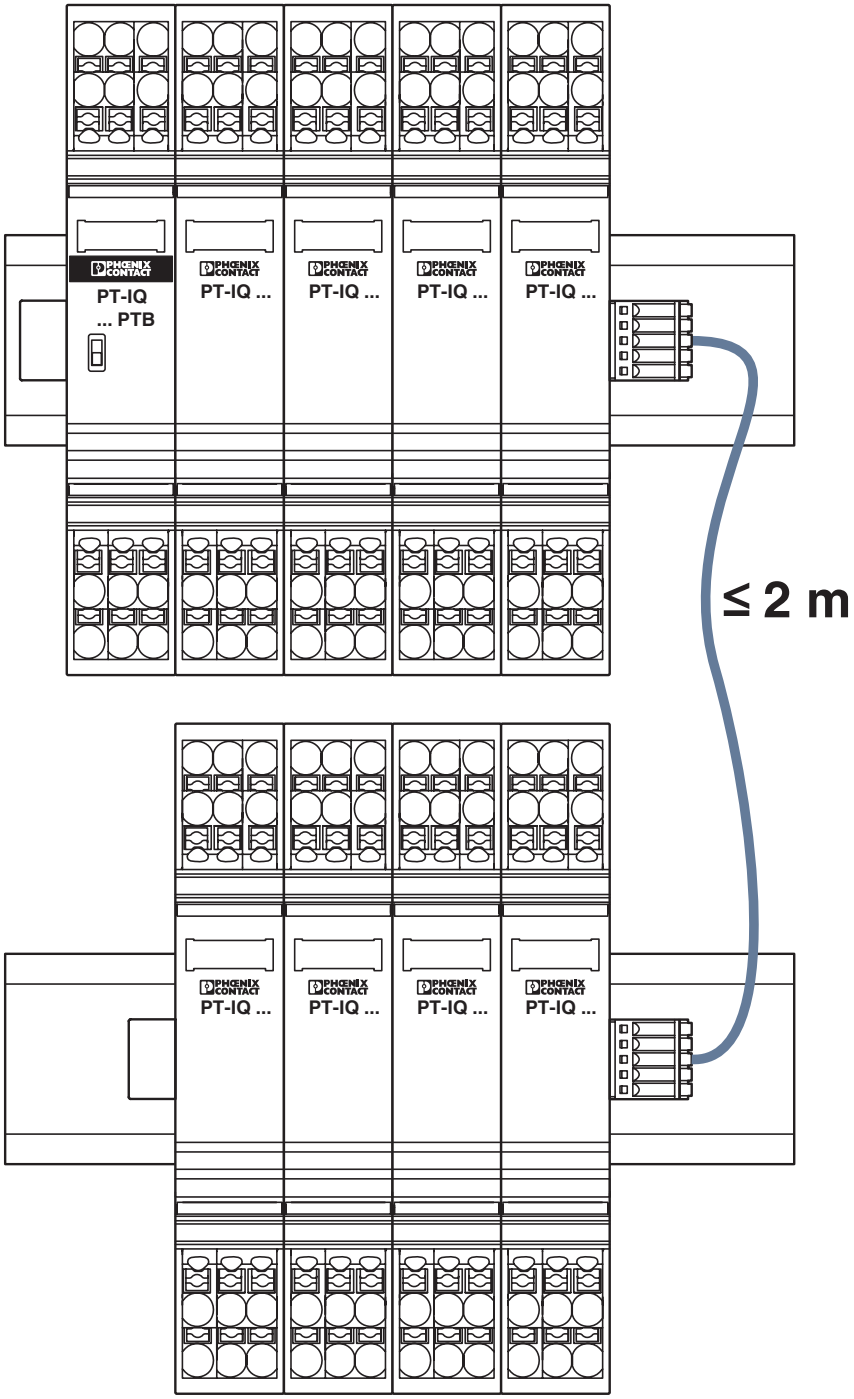

Diagram

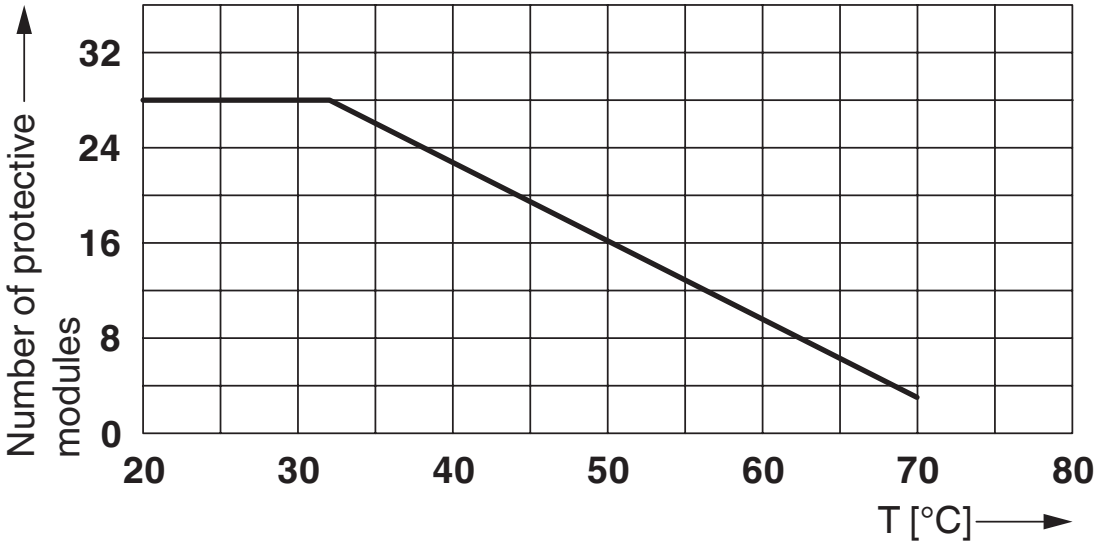

Circuit diagram

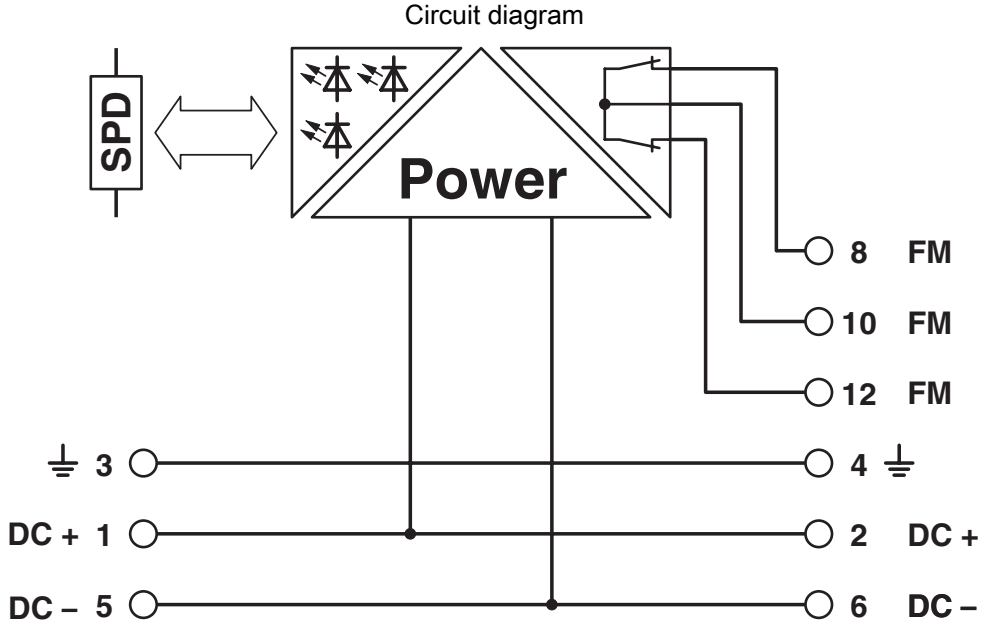

Approvals

To download certificates, visit the product detail page: https://www.phoenixcontact.com/us/products/2801296

CSA
Approval ID: 2761632

UL Listed
Approval ID: FILE E 138168

CSAus
Approval ID: 2761632

Classifications

ECLASS

ECLASS-13.0	27171501
ECLASS-15.0	27171501

ETIM

ETIM 10.0	EC001466

UNSPSC

UNSPSC 21.0	39121600

Environmental product compliance

EU RoHS

Fulfills EU RoHS substance requirements	Yes
Exemption	6(c), 7(a), 7(c)-I

China RoHS

Environment friendly use period (EFUP)	EFUP-50
	An article-related China RoHS declaration table can be found in the download area for the respective article under "Manufacturer declaration". For all articles with EFUP-E, no China RoHS declaration table issued and required.

EU REACH SVHC

REACH candidate substance (CAS No.)	Lead(CAS: 7439-92-1)
SCIP	c8da6a20-c1ab-40fe-a697-76722d313e1d

Phoenix Contact 2026 © - all rights reserved
https://www.phoenixcontact.com

Phoenix Contact USA
586 Fulling Mill Road
Middletown, PA 17057, United States
(+717) 944-1300
info@phoenixcon.com