CN-LAMBDA/4-2.25-BB - Surge protection device

2801057

https://www.phoenixcontact.com/us/products/2801057

Please be informed that the data shown in this PDF document is generated from our online catalog. Please find the complete data in the user documentation. Our general terms of use for downloads are valid.



Attachment plug with Lambda/4 technology as surge protection for coaxial signal interfaces.
Connection: N connectors socket-socket

ELEKTROGERÄTE RÜCKNAHME

Commercial data

Item number	2801057
Packing unit	1 pc
Minimum order quantity	1 pc
Sales key	CL26
Product key	CL3312
GTIN	4046356679091
Weight per piece (including packing)	288.8 g
Weight per piece (excluding packing)	276 g
Customs tariff number	85363010
Country of origin	CN

Technical data

Product properties

Product type	Surge protection for transceiver systems
IEC test classification	C2
	C3
	D1
Type	Intermediate plug
Number of positions	1
Surge protection fault message	none

Insulation characteristics

Overvoltage category	III
Pollution degree	2

Connection data

Connection method	N connector 50 Ω
Tightening torque	1.5 Nm

Dimensions

Dimensional drawing	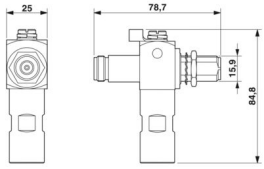
Width	25 mm
Height	77.5 mm
Length	78.7 mm

Material specifications

Color	nickel color
	black (RAL 9005)
Housing material	HPb59-1
Housing surface material	Cu-Sn-Zn
Contact surface material	Au
Inner conductor material	QSn6.5-0.1
Inner conductor surface material	Gold
Insulation body material	PTFE
Spring contact material	QSn6.5-0.1

Mechanical properties

Mechanical data

Open side panel	No

Protective circuit

Direction of action	Line-Shield/Earth Ground
Rated current	5 A (25 °C)
Nominal discharge current I_n (8/20) µs (line-ground)	50 kA
Nominal discharge current I_n (8/20) µs (line-shield)	50 kA
Pulse discharge current I_{imp} (10/350) µs	20 kA
Total surge current (8/20) µs	60 kA
Total surge current (10/350) µs	20 kA
Total discharge current I_{Total} (8/20) µs	60 kA
Max. discharge current I_{max} (8/20) µs maximum (line-earth)	60 kA
Max. discharge current I_{max} (8/20) µs maximum (line-shield)	60 kA
Output voltage limitation at 1 kV/µs (line-earth) spike	≤ 1 V
Output voltage limitation at 1 kV/µs (line-shield) spike	≤ 1 V
Voltage protection level U_p (line-earth)	≤ 5 V (C1 - 1 kV / 500 A)
	≤ 25 V (C2 - 10 kV / 5 kA)
	≤ 18 V (6 kV / 3 kA)
Voltage protection level U_p (line-shield)	≤ 5 V (C1 - 1 kV / 500 A)
	≤ 25 V (C2 - 10 kV / 5 kA)
	≤ 18 V (6 kV / 3 kA)
Input attenuation aE, asym.	typ. 0.1 dB
Frequency range	0.8 GHz ... 2.25 GHz
Voltage standing wave ratio VSWR in a 50 Ω system	typ. 1.20
	max. 1.25
Permissible HF power P_{max} at VSWR = xx (50 ohm system)	≤ 500 W
	≤ 4 kW (peak)
Surge protection fault message	none
Impulse durability (line-earth)	C1 - 1 kV / 500 A
	C2 - 10 kV / 5 kA
	D1 - 2.5 kA

Environmental and real-life conditions

Ambient conditions

Degree of protection	IP68
Ambient temperature (operation)	-40 °C ... 85 °C
Altitude	2000 m

Standards and regulations

Air clearances and creepage distances

Standards/regulations	IEC 60664-1
Standards/specifications	IEC 61643-21/A1
Note	2008
Standards/specifications	EN 61643-21/A1

Note	2009

Mounting

Mounting type	Connection-specific intermediate plugging

Drawings

Dimensional drawing

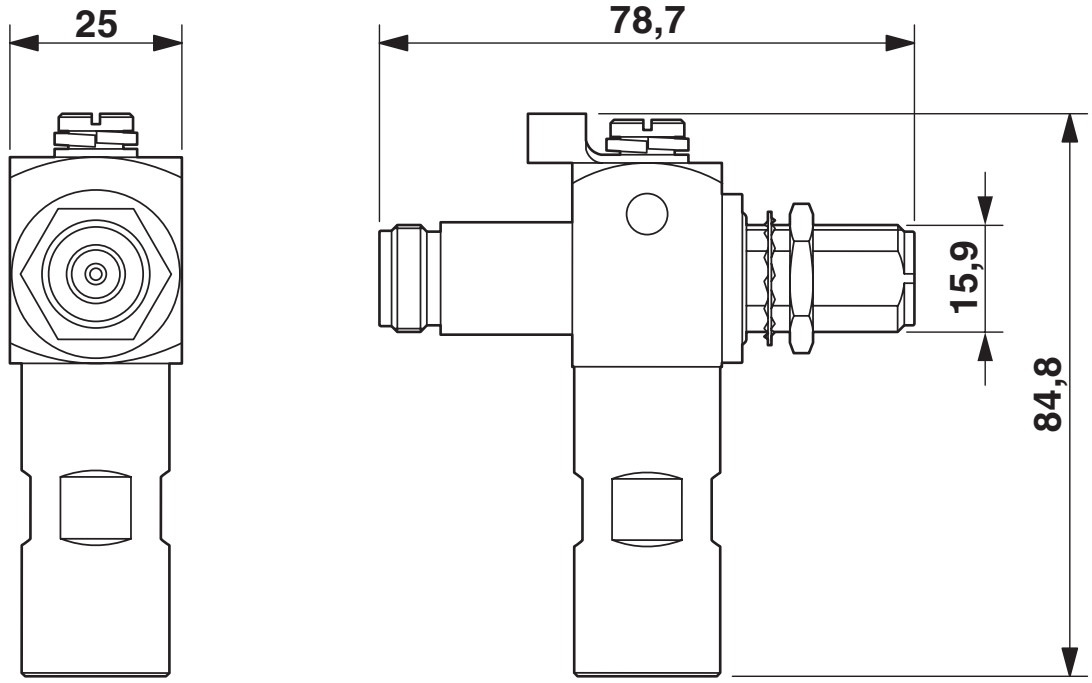

Dimensional drawing
CN-LAMBDA/4-2.25-BB

Diagram

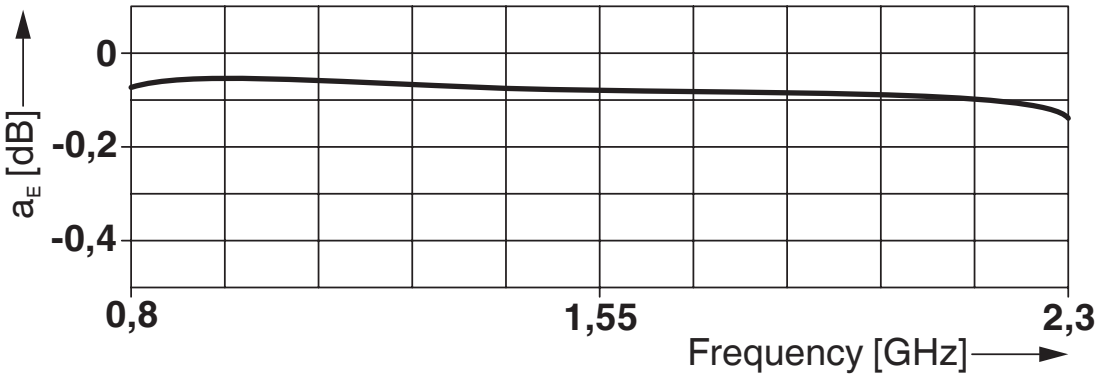

Diagram

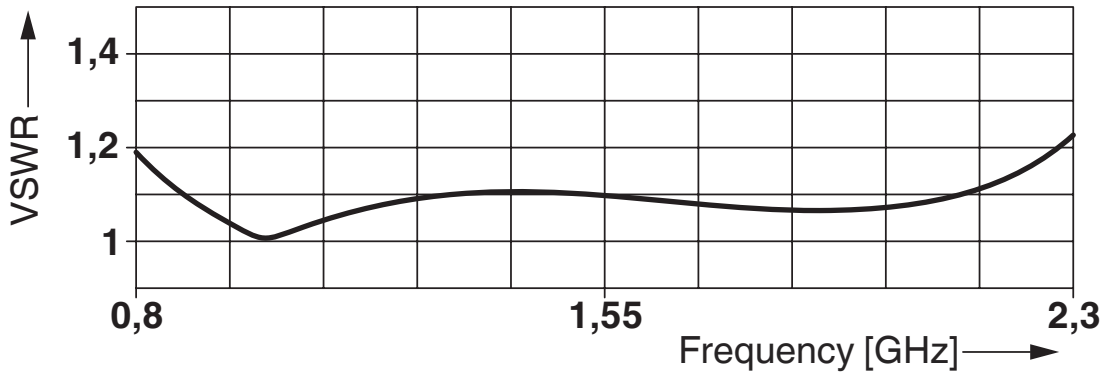

Circuit diagram

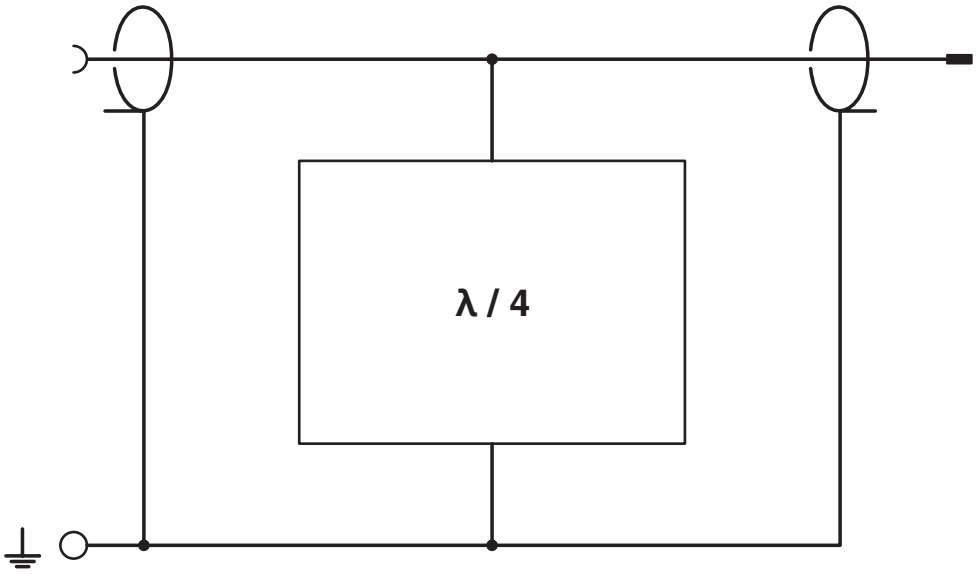

Circuit diagram

Classifications

ECLASS

ECLASS-13.0	27171504
ECLASS-15.0	27171504

ETIM

ETIM 10.0	EC001466

UNSPSC

UNSPSC 21.0	39121600

Environmental product compliance

EU RoHS

Fulfills EU RoHS substance requirements	Yes
Exemption	6(c)

China RoHS

Environment friendly use period (EFUP)	EFUP-50
	An article-related China RoHS declaration table can be found in the download area for the respective article under "Manufacturer declaration". For all articles with EFUP-E, no China RoHS declaration table issued and required.

EU REACH SVHC

REACH candidate substance (CAS No.)	Lead(CAS: 7439-92-1)
SCIP	027a74bc-ead0-4399-b642-54b2c92e3b64

EF3.1 Climate Change

CO2e kg	4.793 kg CO2e

Phoenix Contact 2026 © - all rights reserved
https://www.phoenixcontact.com

Phoenix Contact USA
586 Fulling Mill Road
Middletown, PA 17057, United States
(+717) 944-1300
info@phoenixcon.com