CN-UB-280DC-3-BB - Surge protection device

2801050

https://www.phoenixcontact.com/us/products/2801050

Please be informed that the data shown in this PDF document is generated from our online catalog. Please find the complete data in the user documentation. Our general terms of use for downloads are valid.



Attachment plug with replaceable surge protection for coaxial signal interfaces. Connection: N connector socket/socket

Your advantages

- For outdoor installations
- Mounting plate enables mounting, e.g., in a control cabinet
- Replaceable, gas-filled arrester
- Installed as surge protection between antenna and wireless module

ELEKTROGERÄTE RÜCKNAHME

Commercial data

Item number	2801050
Packing unit	1 pc
Minimum order quantity	1 pc
Sales key	CL25
Product key	CL3311
GTIN	4046356675727
Weight per piece (including packing)	172 g
Weight per piece (excluding packing)	145 g
Customs tariff number	85363010
Country of origin	CN

Technical data

Product properties

Product type	Surge protection for transceiver systems
IEC test classification	C2
	C3
	D1
Type	Intermediate plug
Number of positions	1
Surge protection fault message	none

Insulation characteristics

Overvoltage category	III
Pollution degree	2

Connection data

Connection method	N connector 50 Ω

Dimensions

Dimensional drawing	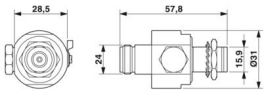
Width	31 mm
Height	33.5 mm
Length	57.8 mm

Material specifications

Color	nickel color
	black (RAL 9005)
Housing material	HPb59-1
Housing surface material	Cu-Sn-Zn
Contact surface material	Au
Inner conductor material	QSn6.5-0.1
Inner conductor surface material	Gold
Insulation body material	PTFE
Spring contact material	QSn6.5-0.1

Mechanical properties

Mechanical data

Open side panel	No

Protective circuit

Direction of action	Line-Shield/Earth Ground

Maximum continuous operating voltage U_C	280 V DC
Maximum continuous voltage U_C (line-earth)	280 V DC
Rated current	5 A (25 °C)
Operating effective current I_C at U_C	≤ 1 µA
Nominal discharge current I_n (8/20) µs (line-ground)	20 kA
Nominal discharge current I_n (8/20) µs (line-shield)	20 kA
Pulse discharge current I_{imp} (10/350) µs	2.5 kA
Total surge current (10/350) µs	2.5 kA
Total discharge current I_{Total} (8/20) µs	20 kA
Max. discharge current I_{max} (8/20) µs maximum (line-earth)	20 kA
Max. discharge current I_{max} (8/20) µs maximum (line-shield)	20 kA
Nominal pulse current Ian (10/1000) µs (line-shield)	100 A
Output voltage limitation at 1 kV/µs (line-earth) spike	≤ 900 V
Output voltage limitation at 1 kV/µs (line-shield) spike	≤ 900 V
Voltage protection level U_p (line-earth)	≤ 900 V (C1 - 1 kV / 500 A)
	≤ 1.1 kV (C2 - 10 kV / 5 kA)
Voltage protection level U_p (line-shield)	≤ 900 V (C1 - 1 kV / 500 A)
	≤ 1.1 kV (C2 - 10 kV / 5 kA)
Response time t_A (line-earth)	≤ 100 ns
Response time tA (line-shield)	≤ 100 ns
Input attenuation aE, asym.	typ. 0.1 dB (≤ 3 GHz)
Cut-off frequency fg (3 dB), asym. (shield) in 50 Ω system	> 3 GHz
Frequency range	0 Hz ... 3 GHz
Voltage standing wave ratio VSWR in a 50 Ω system	typ. 1.15 (≤ 3 GHz)
	max. 1.20
Permissible HF power P_{max} at VSWR = xx (50 ohm system)	700 W (VSWR = 1.1)
	200 W (VSWR = ∞)
Capacity (Core-Earth)	typ. 1.5 pF
Capacity asymmetrical (shield)	typ. 1.5 pF
Surge protection fault message	none
Impulse durability (line-earth)	C2 - 10 kV / 5 kA
	C3 - 100 A
	D1 - 2.5 kA

Environmental and real-life conditions

Ambient conditions

Degree of protection	IP55
	IP55
Ambient temperature (operation)	-40 °C ... 80 °C
Altitude	2000 m

Standards and regulations

Air clearances and creepage distances

Standards/regulations	IEC 60664-1
Standards/specifications	IEC 61643-21/A1
Note	2008
Standards/specifications	EN 61643-21/A1
Note	2009

Mounting

Mounting type	Connection-specific intermediate plugging

Drawings

Dimensional drawing

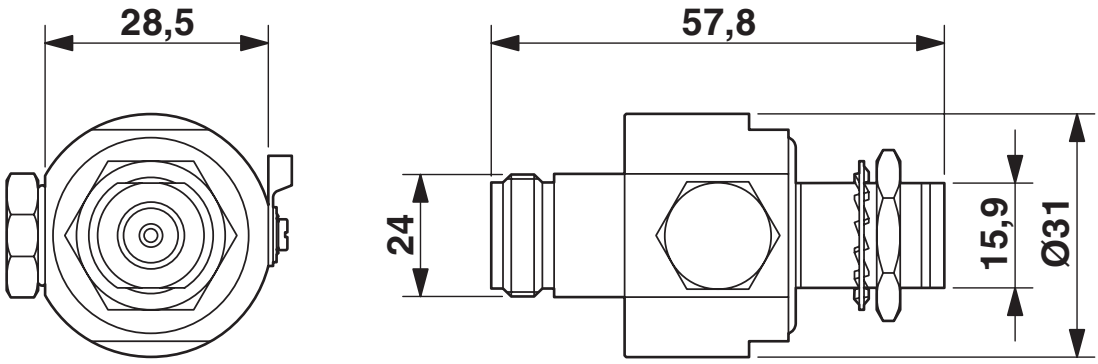

Dimensional drawing
CN-UB-280DC-3-BB

Application drawing

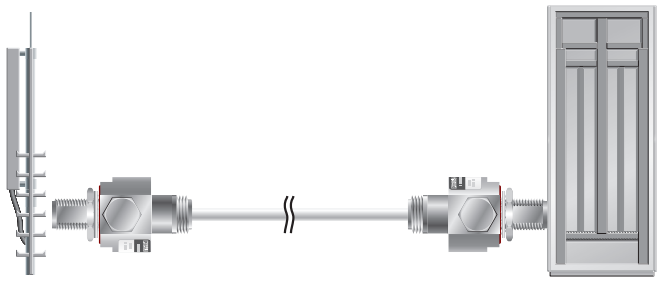

Diagram

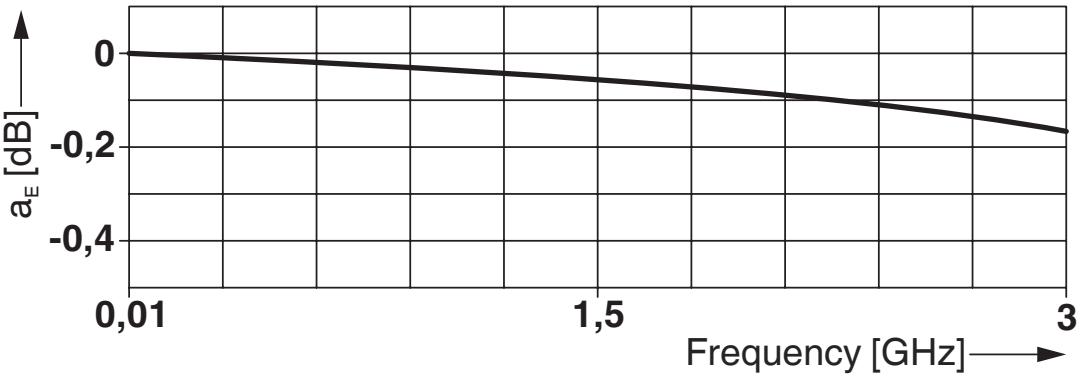

Diagram

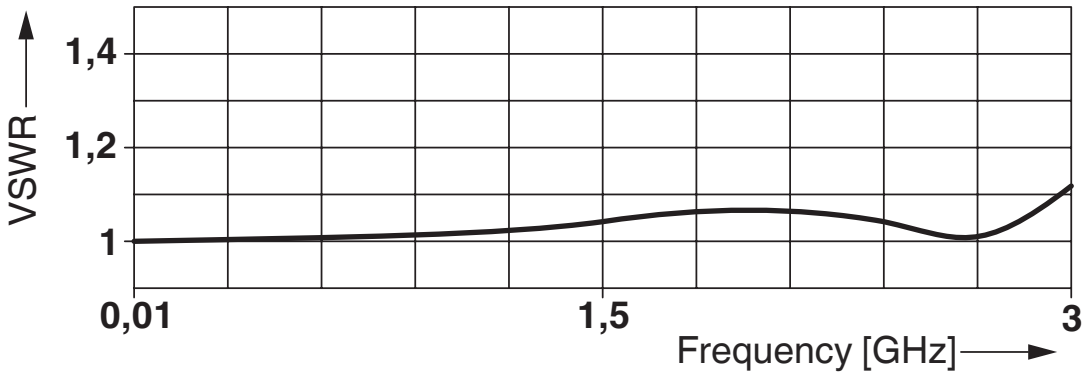

Circuit diagram

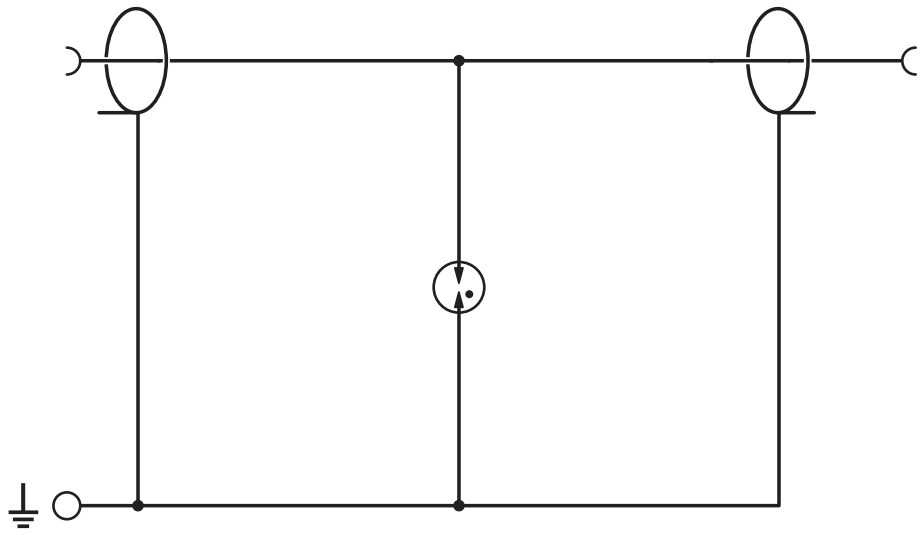

Circuit diagram

Classifications

ECLASS

ECLASS-13.0	27171504
ECLASS-15.0	27171504

ETIM

ETIM 10.0	EC001466

UNSPSC

UNSPSC 21.0	39121600

Environmental product compliance

EU RoHS

Fulfills EU RoHS substance requirements	Yes
Exemption	6(c)

China RoHS

Environment friendly use period (EFUP)	EFUP-50
	An article-related China RoHS declaration table can be found in the download area for the respective article under "Manufacturer declaration". For all articles with EFUP-E, no China RoHS declaration table issued and required.

EU REACH SVHC

REACH candidate substance (CAS No.)	Lead(CAS: 7439-92-1)
SCIP	9e1186ee-bfb3-4a02-b69a-0715150a9b35

Phoenix Contact 2026 © - all rights reserved
https://www.phoenixcontact.com

Phoenix Contact USA
586 Fulling Mill Road
Middletown, PA 17057, United States
(+717) 944-1300
info@phoenixcon.com