LM-S-A/C-3S-ETH - Lightning monitoring system

2800618

https://www.phoenixcontact.com/us/products/2800618

Please be informed that the data shown in this PDF document is generated from our online catalog. Please find the complete data in the user documentation. Our general terms of use for downloads are valid.



Evaluation unit for the live monitoring system for the continuous detection and evaluation of lightning strikes. Up to three optical lightning sensors can be connected.

Your advantages

- Evaluation and storage of sensor data
- Realtime analysis and exact point of time allocation
- Status and diagnostic indicators
- Communication via Ethernet
- Operation and configuration via web interface

Commercial data

Item number	2800618
Packing unit	1 pc
Minimum order quantity	1 pc
Sales key	CL05
Product key	CLB313
GTIN	4046356615297
Weight per piece (including packing)	2,104.2 g
Weight per piece (excluding packing)	1,370 g
Customs tariff number	85437090
Country of origin	DE

Technical data

Product properties

Product type	Evaluation unit
Product family	LM-S
Type	DIN rail module, one-piece

Insulation characteristics

Overvoltage category	II
Pollution degree	2

Electrical properties

Current consumption	≤ 10 W (Ready for operation, LED status <50%)
Nominal voltage U_N	24 V DC

Indicator/remote signaling

Switching function	N/C contact, 1-pos.
Maximum operating voltage U_{max} DC	60 V DC

Evaluation unit

Operating voltage	24 V DC ±4 V
Operating current	max. 500 mA
Detectable values (current strength)	5.00 kA ... 400.00 kA

Evaluation unit Ethernet ports

Interface	Ethernet
Number	1
Connection method	RJ45
Transmission speed	10/100 Mbps

Evaluation unit Sensor interfaces

Interface	O/E module
Number of ports	3
Connection method	Rack for plug-in I/O module

Evaluation unit Function

Basic functions	Evaluation and communication of sensor data
Operation	Via web interface, Modbus, OPC-UA
Maximum storable data records	500

O/E converter

Interface	Fiber optic interface
Number of ports	3
Connection method	B-FOC (ST®)

Dimensions

Dimensional drawing	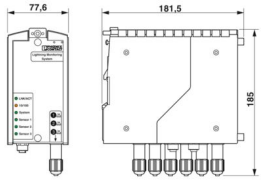
Width	77.6 mm
Height	185 mm
Depth	181.5 mm

Material specifications

Color	silver-colored
	black (RAL 9005)
Housing material	Stainless steel 1.4016

Mechanical properties

Mechanical data

Open side panel	No

Environmental and real-life conditions

Ambient conditions

Degree of protection	IP20
Ambient temperature (operation)	-30 °C ... 60 °C
Ambient temperature (storage/transport)	-40 °C ... 85 °C
Altitude	≤ 4000 m (amsl)
Permissible humidity (operation)	30 % ... 95 % (non-condensing)
Permissible humidity (storage/transport)	30 % ... 95 % (non-condensing)

Standards and regulations

Standards/specifications	EN 61326-1
Note	2013

Mounting

Mounting type	DIN rail: 35 mm

Drawings

Dimensional drawing

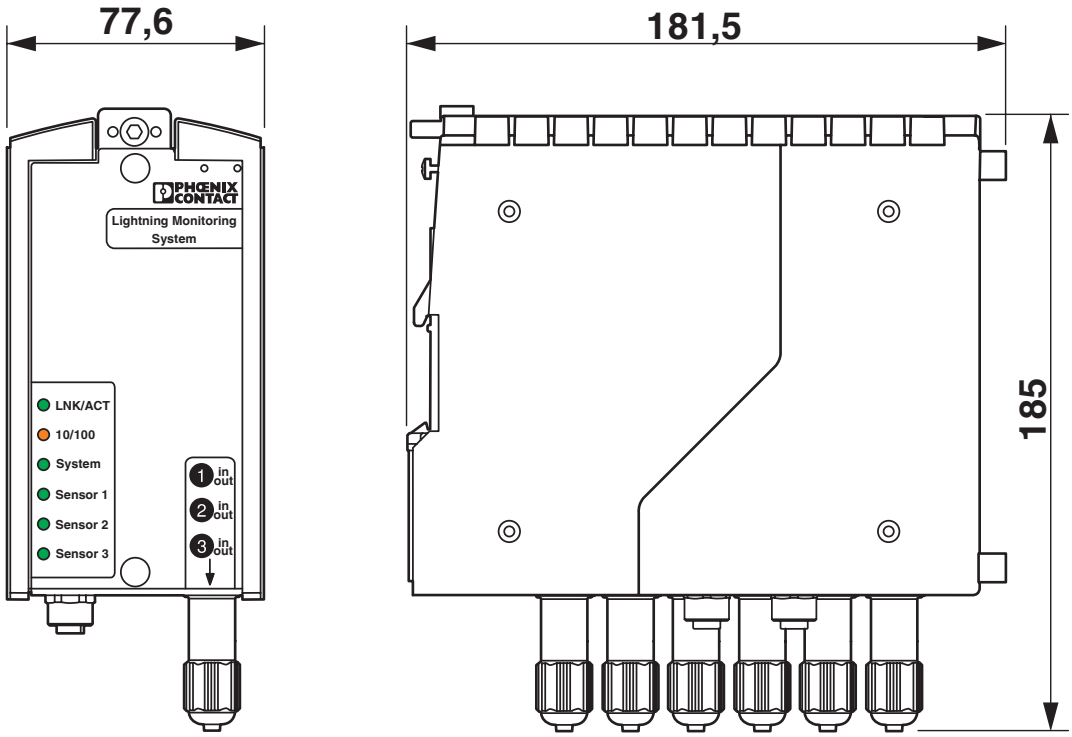

Schematic diagram

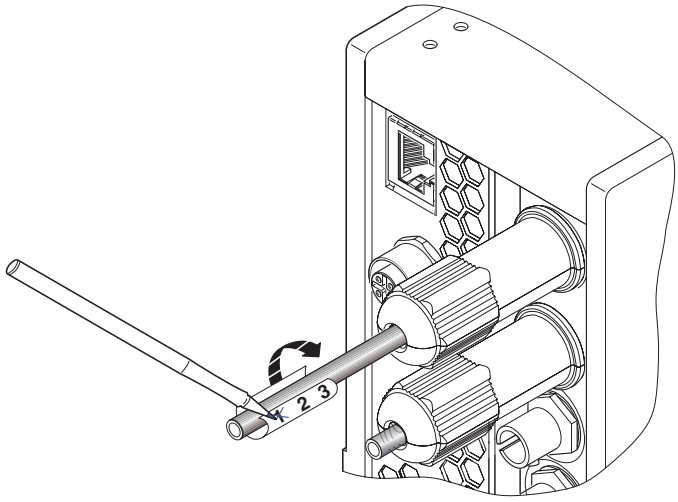

Marking of the connecting cable

Classifications

ECLASS

ECLASS-13.0	27170104
ECLASS-15.0	27170104

ETIM

ETIM 10.0	EC002965

UNSPSC

UNSPSC 21.0	39121600

Environmental product compliance

EU RoHS

Fulfills EU RoHS substance requirements	Yes
Exemption	6(a), 6(a)-I, 6(c), 7(a), 7(c)-I

China RoHS

Environment friendly use period (EFUP)	EFUP-50
	An article-related China RoHS declaration table can be found in the download area for the respective article under "Manufacturer declaration". For all articles with EFUP-E, no China RoHS declaration table issued and required.

EU REACH SVHC

REACH candidate substance (CAS No.)	Lead(CAS: 7439-92-1)
SCIP	4aa1f42f-3281-4db8-8464-1802c9d33707

Phoenix Contact 2026 © - all rights reserved
https://www.phoenixcontact.com

Phoenix Contact USA
586 Fulling Mill Road
Middletown, PA 17057, United States
(+717) 944-1300
info@phoenixcon.com