CN-LAMBDA/4-5.9-SB - Surge protection device

2800023

https://www.phoenixcontact.com/us/products/2800023

Please be informed that the data shown in this PDF document is generated from our online catalog. Please find the complete data in the user documentation. Our general terms of use for downloads are valid.



Attachment plug with Lambda/4 technology as surge protection for coaxial signal interfaces.
Connection: N connectors plug/socket

Your advantages

- Easy installation with system-compliant connection
- Use under extreme ambient conditions with robust design
- Service-friendly with maintenance-free protective circuit
- Exceptional protective properties with Lambda/4 technology

Commercial data

Item number	2800023
Packing unit	1 pc
Minimum order quantity	1 pc
Sales key	CL26
Product key	CL3312
GTIN	4046356410083
Weight per piece (including packing)	195.1 g
Weight per piece (excluding packing)	187.8 g
Customs tariff number	85363010
Country of origin	US

Technical data

Product properties

Product type	Surge protection for transceiver systems
IEC test classification	C2
	C3
	D1
VDE requirement class	C2
	C3
	D1
Type	Intermediate plug
Surge protection fault message	none

Connection data

Connection method	N connector 50 Ω
Tightening torque	1.4 Nm ... 1.7 Nm (N coupling nut)

Dimensions

Dimensional drawing	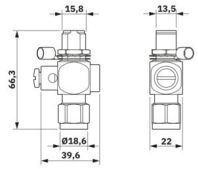
Width	26.1 mm
Height	38 mm
Depth	65 mm

Material specifications

Color	nickel color
Seal material	Silicon
Housing material	Brass (CuZn)
Housing surface material	Ni
Inner conductor material	BeCu
Inner conductor surface material	Gold
Insulation body material	PTFE

Mechanical properties

Mechanical data

Open side panel	No

Protective circuit

Direction of action	Line-Shield/Earth Ground

Rated current	5 A (25 °C)
Nominal discharge current I_n (8/20) µs (line-ground)	50 kA
Nominal discharge current I_n (8/20) µs (line-shield)	50 kA
Pulse discharge current I_{imp} (10/350) µs	20 kA
Pulse discharge current I_{imp} (10/350) µs (line-earth)	20 kA
Max. discharge current I_{max} (8/20) µs maximum (line-earth)	60 kA
Max. discharge current I_{max} (8/20) µs maximum (line-shield)	60 kA
Impulse discharge current (10/350) µs, peak value I_{imp}	20 kA
Voltage protection level U_p (line-earth)	≤ 11 V (6 kV / 3 kA)
Voltage protection level U_p (line-shield)	≤ 11 V (6 kV / 3 kA)
Input attenuation aE, asym.	typ. 0.15 dB (≤0.25 dB)
Frequency range	2.4 GHz ... 7.6 GHz
Voltage standing wave ratio VSWR in a 50 Ω system	typ. 1.10 (2.4 GHz ... 5.9 GHz)
	≤ 1.20 (2.4 GHz ... 7.6 GHz)
Permissible HF power P_{max} at VSWR = xx (50 ohm system)	≤ 500 W
	≤ 4 kW (peak)
Surge protection fault message	none
Impulse durability (line-earth)	C2 - 10 kV / 5 kA
	D1 - 2.5 kA
Impulse durability (line-shield)	C2 - 10 kV/5 kA
	D1 - 2.5 kA

Environmental and real-life conditions

Ambient conditions

Degree of protection	IP68 (24 h / 1 m)
Ambient temperature (operation)	-40 °C ... 90 °C

Approvals

Conformity/Approvals

FCC	Part 15, Part 90

Standards and regulations

VDE requirement class	C2
	C3
	D1
Standards/specifications	IEC 61643-21
Note	2005

Mounting

Mounting type	Connection-specific intermediate plugging

Drawings

Dimensional drawing

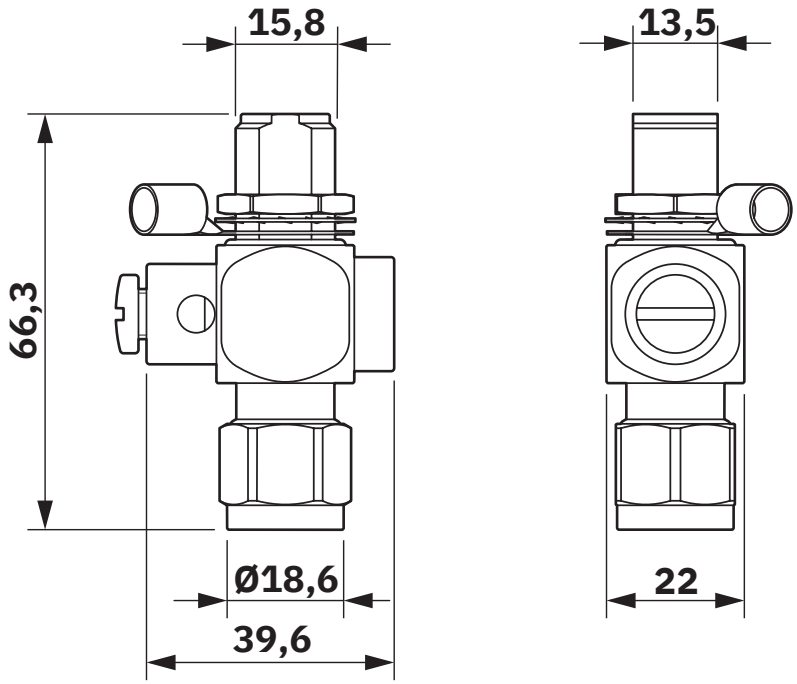

Circuit diagram

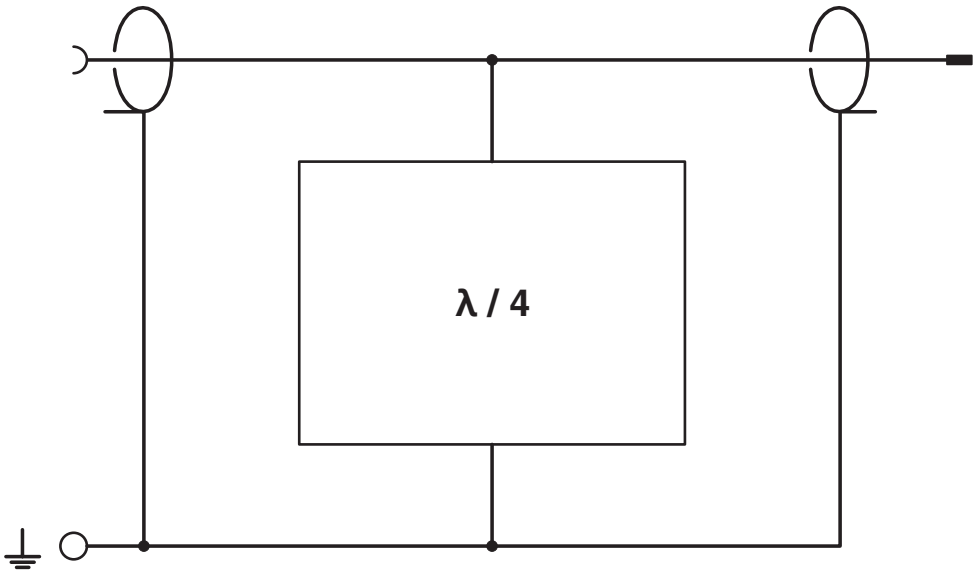

Classifications

ECLASS

ECLASS-13.0	27171504
ECLASS-15.0	27171504

ETIM

ETIM 10.0	EC001466

UNSPSC

UNSPSC 21.0	39121600

Environmental product compliance

EU RoHS

Fulfills EU RoHS substance requirements	Yes, No exemptions

China RoHS

Environment friendly use period (EFUP)	EFUP-E
	No hazardous substances above the limits

EU REACH SVHC

REACH candidate substance (CAS No.)	No substance above 0.1 wt%

EF3.1 Climate Change

CO2e kg	12.214 kg CO2e

Phoenix Contact 2026 © - all rights reserved
https://www.phoenixcontact.com

Phoenix Contact USA
586 Fulling Mill Road
Middletown, PA 17057, United States
(+717) 944-1300
info@phoenixcon.com