UDK-RELG 3 - Basic terminal block

2777043

https://www.phoenixcontact.com/us/products/2777043

Please be informed that the data shown in this PDF document is generated from our online catalog. Please find the complete data in the user documentation. Our general terms of use for downloads are valid.

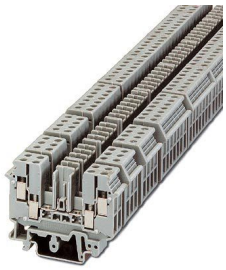

The figure shows versions with a different no. of positions

Basic terminal blocks with test pick-off on both sides and double connections with the same potential for NS 32 and NS 35/7,5 DIN rail, with end cover, for ST-REL..., ST-OV... , and ST-OE... plugs, 3-pos.

Commercial data

Item number	2777043
Packing unit	10 pc
Minimum order quantity	10 pc
Sales key	C460
Product key	DK61B4
GTIN	4017918068639
Weight per piece (including packing)	50.48 g
Weight per piece (excluding packing)	47.268 g
Customs tariff number	85366990
Country of origin	TR

Technical data

Product properties

Product type	Relay socket
Number of positions	3

Electrical properties

Nominal voltage U_N	400 V (voltage is determined by the coupling connector.)
Nominal current I_N	16 A (current is determined by the coupling connector.)

Connection data

Connection method	Screw connection
Stripping length	7 mm
Screw thread	M3
Conductor cross-section rigid	0.2 mm² ... 4 mm²
Conductor cross-section flexible	0.2 mm² ... 4 mm²
Conductor cross-section AWG	24 ... 12

Dimensions

Dimensional drawing	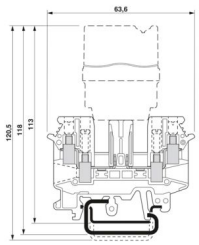
Width	20.8 mm (with cover)
Height	63.6 mm
Depth	113 mm

Material specifications

Color	gray (RAL 7042)
Insulating material	PA

Environmental and real-life conditions

Ambient conditions

Ambient temperature (operation)	-20 °C ... 50 °C
Ambient temperature (storage/transport)	-20 °C ... 70 °C

Drawings

Dimensional drawing

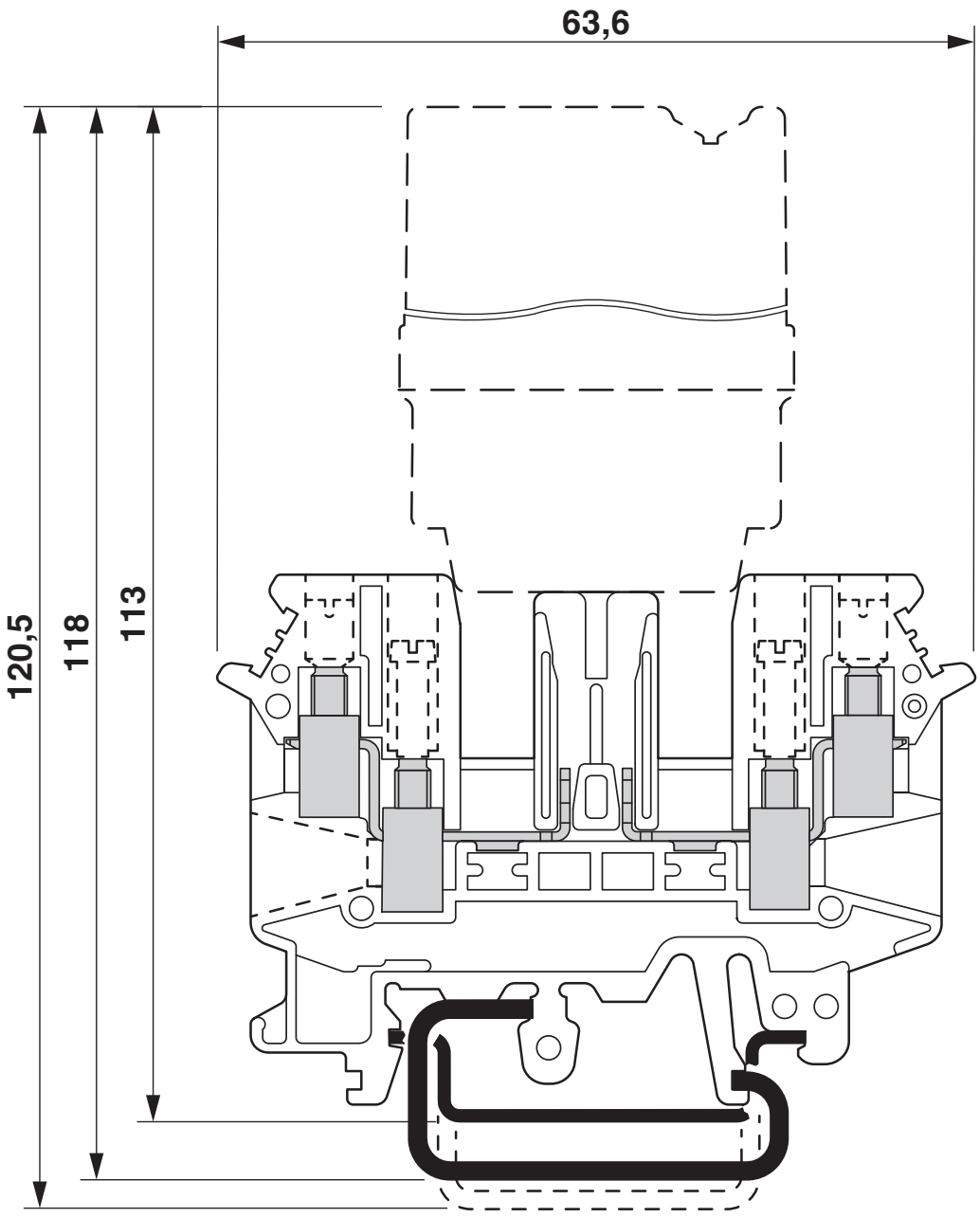

Schematic diagram

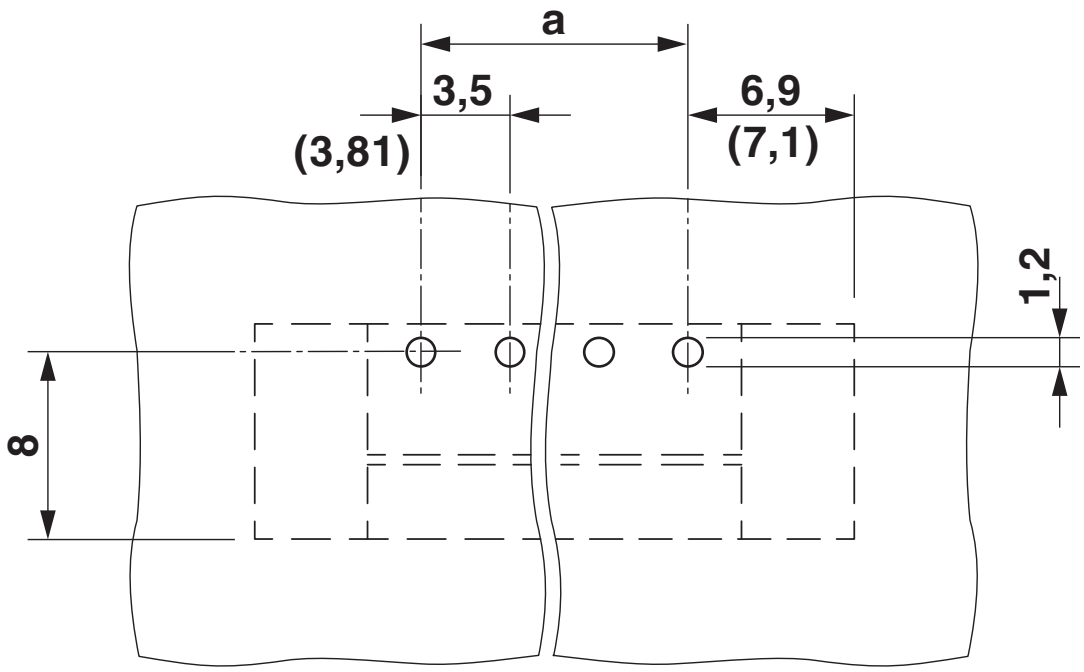

1-3 = fixed bridge, cross connection rail, spacer

Schematic diagram

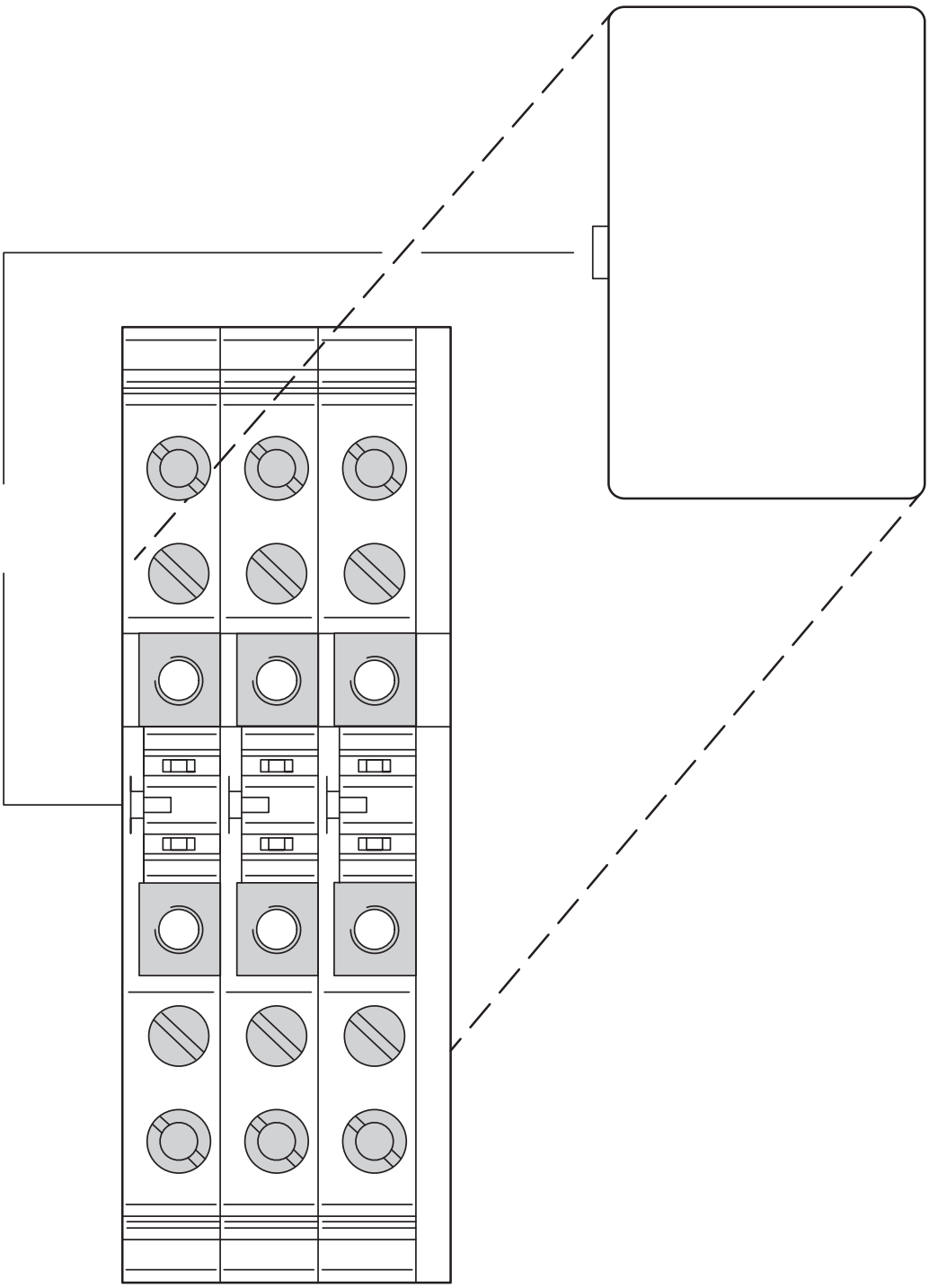

1 = Coupling connector
2 = Coding
3 = Cover
4 = Basic termination block

Approvals

To download certificates, visit the product detail page: https://www.phoenixcontact.com/us/products/2777043

cUL Recognized
Approval ID: FILE E 60425

	Nominal voltage U_N	Nominal current I_N	Cross section AWG	Cross section mm^2
keine				
	300 V	15 A	30 - 12	-

UL Recognized
Approval ID: FILE E 60425

	Nominal voltage U_N	Nominal current I_N	Cross section AWG	Cross section mm^2
keine				
	300 V	15 A	30 - 12	-

Classifications

ECLASS

ECLASS-13.0	27371603
ECLASS-15.0	27371603

ETIM

ETIM 10.0	EC001456

UNSPSC

UNSPSC 21.0	39122300

Environmental product compliance

EU RoHS

Fulfills EU RoHS substance requirements	Yes
Exemption	6(c)

China RoHS

Environment friendly use period (EFUP)	EFUP-50
	An article-related China RoHS declaration table can be found in the download area for the respective article under "Manufacturer declaration". For all articles with EFUP-E, no China RoHS declaration table issued and required.

EU REACH SVHC

REACH candidate substance (CAS No.)	Lead(CAS: 7439-92-1)
SCIP	5be5c0cb-681b-4192-9690-3a0a479caddb

EF3.1 Climate Change

CO2e kg	0.371 kg CO2e

Phoenix Contact 2026 © - all rights reserved
https://www.phoenixcontact.com

Phoenix Contact USA
586 Fulling Mill Road
Middletown, PA 17057, United States
(+717) 944-1300
info@phoenixcon.com