UKK 3-MSTB-5,08 AU 32L - Double-level terminal block

2770969

https://www.phoenixcontact.com/us/products/2770969

Please be informed that the data shown in this PDF document is generated from our online catalog. Please find the complete data in the user documentation. Our general terms of use for downloads are valid.





The figure shows the article UKK 3-MSTB-5,08

Double-level terminal block, 32-pos. blocked, nom. voltage: 250 V, nominal current: 10 A, number of connections: 128, number of positions: 32, connection method: Screw/plug-in connection, 1st and 2nd level connection left, cross section: 0.2 mm^2 - 4 mm^2, mounting type: NS 35/7,5, NS 35/15, NS 32, color: gray

Commercial data

Item number	2770969
Packing unit	5 pc
Minimum order quantity	5 pc
Sales key	BE12
Product key	BE1241
GTIN	4017918243357
Weight per piece (including packing)	145.82 g
Weight per piece (excluding packing)	116.4 g
Customs tariff number	85369010
Country of origin	PL

Technical data

Notes

General	Current and voltage are determined by the plug used.

Product properties

Product type	Hybrid terminal block
Product family	UKK 3-MSTB
Number of positions	32
Pitch	5.08 mm
Number of connections	128
Number of rows	2
Potentials	64

Insulation characteristics

Overvoltage category	III
Degree of pollution	3

Electrical properties

Rated surge voltage	4 kV

Connection data

1st and 2nd level connection left

Connection method	Screw/plug-in connection
Screw thread	M3
Tightening torque	0.5 ... 0.6 Nm
Stripping length	8 mm
Internal cylindrical gage	A3
Conductor cross-section rigid	0.2 mm² ... 4 mm²
Cross section AWG	24 ... 12 (converted acc. to IEC)
Conductor cross-section flexible	0.2 mm² ... 2.5 mm²
Conductor cross-section, flexible [AWG]	24 ... 14 (converted acc. to IEC)
Conductor cross-section flexible (ferrule without plastic sleeve)	0.25 mm² ... 2.5 mm²
Flexible conductor cross-section (ferrule with plastic sleeve)	0.25 mm² ... 1.5 mm²
2 conductors with same cross section, rigid	0.2 mm² ... 1.5 mm²
2 conductors with same cross section, flexible	0.2 mm² ... 1 mm²
2 conductors with same cross section, flexible, with ferrule without plastic sleeve	0.25 mm² ... 0.5 mm²
2 conductors with the same cross section, flexible, with TWIN ferrule with plastic sleeve	0.5 mm² ... 1 mm²
Nominal current	10 A
Maximum load current	12 A (with 4 mm² conductor cross-section)
Nominal voltage	250 V

UKK 3-MSTB-5,08 AU 32L - Double-level terminal block

2770969

https://www.phoenixcontact.com/us/products/2770969

Dimensions

Dimensional drawing	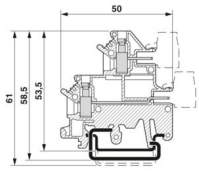
Width	88.9 mm
End cover width	2.5 mm
Height	50 mm
Depth on NS 35/7,5	53.5 mm
Pitch	5.08 mm

Material specifications

Color	gray (RAL 7042)
Flammability rating according to UL 94	V2
Insulating material group	I
Insulating material	PA
Contact surface	Gold Au

Mechanical properties

Mechanical data

Open side panel	Yes

Environmental and real-life conditions

Ambient conditions

Ambient temperature (operation)	-60 °C (max. operating temperature see derating curve)
Ambient temperature (storage/transport)	-25 °C ... 60 °C (for a short time, not exceeding 24 h, -60 °C to +70 °C)
Ambient temperature (assembly)	-5 °C ... 70 °C
Ambient temperature (actuation)	-5 °C ... 70 °C
Permissible humidity (operation)	20 % ... 90 %
Permissible humidity (storage/transport)	30 % ... 70 %

Mounting

Mounting type	NS 35/7,5
	NS 35/15
	NS 32

Drawings

Dimensional drawing

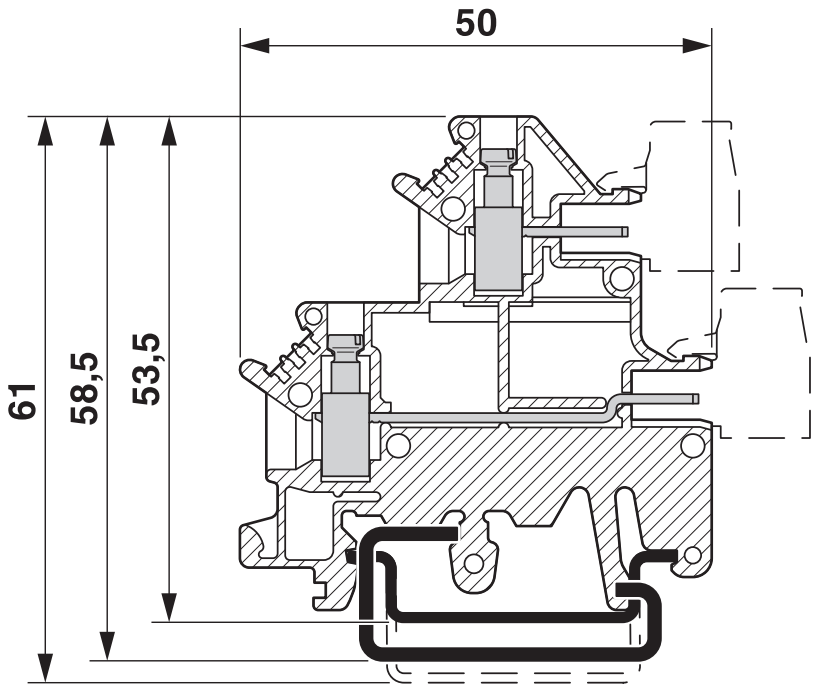

Classifications

ECLASS

ECLASS-13.0	27250201
ECLASS-15.0	27250201

ETIM

ETIM 10.0	EC000897

UNSPSC

UNSPSC 21.0	39121400

Environmental product compliance

EU RoHS

Fulfills EU RoHS substance requirements	Yes
Exemption	6(c)

China RoHS

Environment friendly use period (EFUP)	EFUP-50
	An article-related China RoHS declaration table can be found in the download area for the respective article under "Manufacturer declaration". For all articles with EFUP-E, no China RoHS declaration table issued and required.

EU REACH SVHC

REACH candidate substance (CAS No.)	Lead(CAS: 7439-92-1)
SCIP	3656c395-8dc7-4911-b2f8-7772e02420fa

Phoenix Contact 2026 © - all rights reserved
https://www.phoenixcontact.com

Phoenix Contact USA
586 Fulling Mill Road
Middletown, PA 17057, United States
(+717) 944-1300
info@phoenixcon.com