PAS-1 - Equipotential bonding strip

2765615

https://www.phoenixcontact.com/us/products/2765615

Please be informed that the data shown in this PDF document is generated from our online catalog. Please find the complete data in the user documentation. Our general terms of use for downloads are valid.



Equipotential bonding strip for connecting circular conductors with a cross-section of 2.5 mm^2 ... 95 mm^2

Product description

The PAS-1 equipotential busbar is designed for main equipotential bonding in accordance with DIN VDE 0185. PAS-1 has a comb-shaped contact bar. Nine loose slide-on terminal blocks are used to connect circular conductors with a cross-section of 2.5 mm^2 to 95 mm^2. In addition, a 4 x 30 mm steel strip can be connected with the double terminal block (2), see figure below. Inside the sealable plastic cover there is a label where the designations of the connected conductors can be entered. PAS-1 carries the VDE mark as per DIN VDE 0618-1:2023-03.

Commercial data

Item number	2765615
Packing unit	1 pc
Minimum order quantity	1 pc
Sales key	CL01
Product key	CL113Z
GTIN	4017918066475
Weight per piece (including packing)	380 g
Weight per piece (excluding packing)	380 g
Customs tariff number	85369010
Country of origin	DE

Technical data

Product properties

Product type	Equipotential bonding strip

Connection data

Connection method	Screw connection
Conductor cross-section rigid	2.5 mm² ... 95 mm²

Dimensions

Dimensional drawing	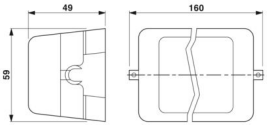
Width	59 mm
Height	149 mm
Depth	49 mm

Material specifications

Color	black (RAL 9005)
	silver-colored

Drawings

Dimensional drawing

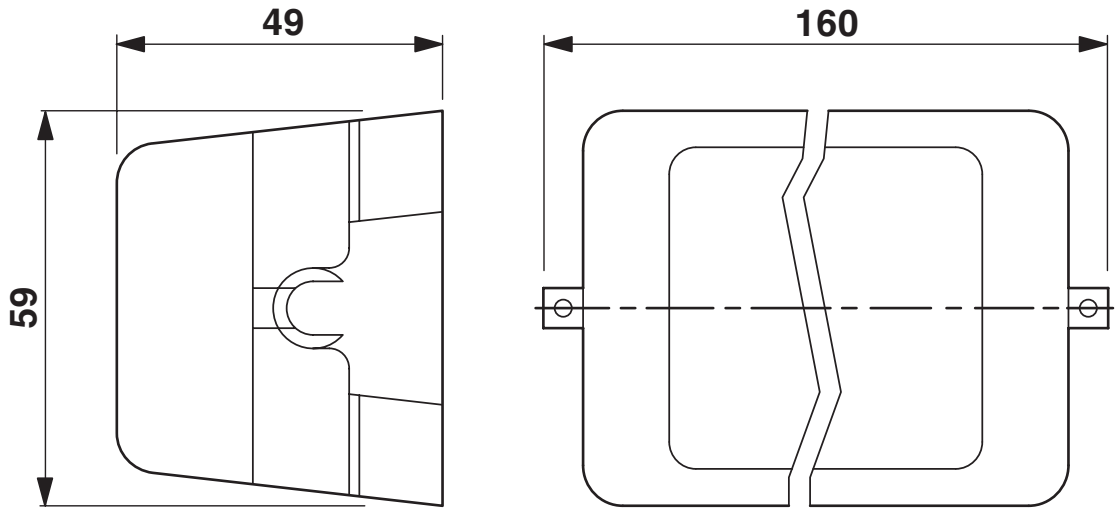

Schematic diagram

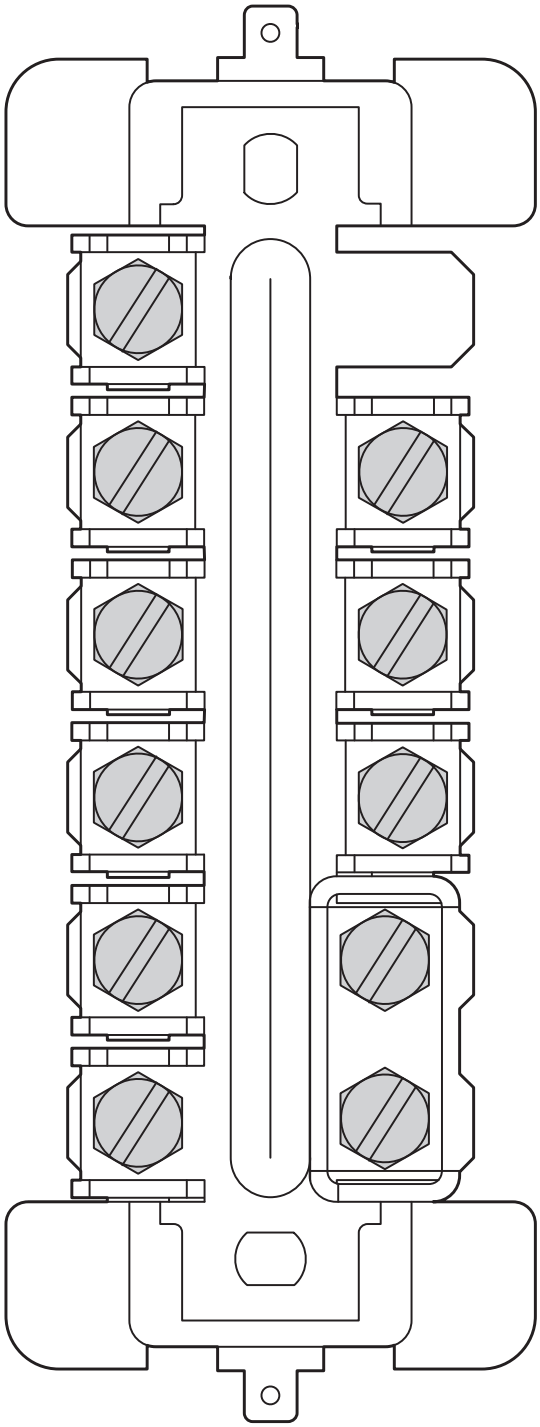

Approvals

To download certificates, visit the product detail page: https://www.phoenixcontact.com/us/products/2765615

VDE Zeichengenehmigung
Approval ID: 73234

	Nominal voltage U_N	Nominal current I_N	Cross section AWG	Cross section mm^2
keine				
Mark approval certificate	-	-	-	- 95

Classifications

ECLASS

ECLASS-13.0	27171001
ECLASS-15.0	27171001

ETIM

ETIM 10.0	EC001470

UNSPSC

UNSPSC 21.0	39121100

Environmental product compliance

EU RoHS

Fulfills EU RoHS substance requirements	Yes, No exemptions

China RoHS

Environment friendly use period (EFUP)	EFUP-E
	No hazardous substances above the limits

EU REACH SVHC

REACH candidate substance (CAS No.)	No substance above 0.1 wt%

Phoenix Contact 2026 © - all rights reserved
https://www.phoenixcontact.com

Phoenix Contact USA
586 Fulling Mill Road
Middletown, PA 17057, United States
(+717) 944-1300
info@phoenixcon.com