SUBCON-PLUS F3 - D-SUB bus connector

2761871

https://www.phoenixcontact.com/us/products/2761871

Please be informed that the data shown in this PDF document is generated from our online catalog. Please find the complete data in the user documentation. Our general terms of use for downloads are valid.



D-SUB connector, 9-pos. female connector, two cable entries < 35°, bus system: CANopen, FIP, pin assignment: 2, 3, 6, 7, 8, 9 to two screw connection terminal blocks

Your advantages

- Assembly under field conditions
- Separate terminal blocks for each cable
- High transmission speed
- Easy assembly thanks to knurled screws
- High level of EMC
- Flexibility in terms of cable entry selection
- Can be used universally
- Change to the D-SUB orientation through a reversible connection block

ELEKTROGERÄTE RÜCKNAHME

Commercial data

Item number	2761871
Packing unit	1 pc
Minimum order quantity	1 pc
Sales key	DN10
Product key	DNC521
GTIN	4017918156299
Weight per piece (including packing)	58.6 g
Weight per piece (excluding packing)	61.4 g
Customs tariff number	85366990

Country of origin	DE

Technical data

Notes

Utilization restriction

CCCex note	Use in potentially explosive areas is not permitted in China.

Product properties

Product type	Data plug
MTTF	6706 Years (SN 29500 standard, temperature 25°C, operating cycle 21%)
	1817 Years (SN 29500 standard, temperature 40°C, operating cycle 34.25%)
	155 Years (SN 29500 standard, temperature 40°C, operating cycle 100%)
Pin assignment	2, 3, 6, 7, 8, 9 on two terminal blocks

Electrical properties

Nominal voltage U_N	30 V AC/DC
Nominal current I_N	100 mA
Transmission medium	Copper

Connection data

D-SUB connection

Connection method	D-SUB socket

PCB connection

Connection method	Screw connection
Stripping length	5 mm
Conductor cross-section, rigid min.	0.14 mm²
Conductor cross-section, rigid max.	1.5 mm²
Conductor cross-section flexible min.	0.14 mm²
Conductor cross-section flexible max.	1 mm²
Single-wire/terminal point, rigid AWG min.	26
Single-wire/terminal point, rigid AWG max.	16
Min. AWG conductor cross-section, flexible	26
Max. AWG conductor cross-section, flexible	18
Tightening torque	0.22 Nm ... 0.25 Nm

Interfaces

Bus system	CANopen®, FIP
Signal	RS-485

Dimensions

Dimensional drawing	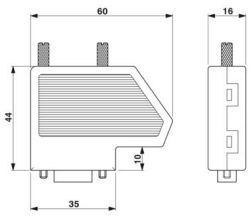
Width	16 mm
Height	44 mm
Length	60 mm

Material specifications

Color (Housing)	white aluminium (RAL 9006)
Material (Housing)	ABS (metal-plated)

Cable/line

External cable diameter	6 mm ... 10 mm (Incoming bus line)

Mechanical properties

Mechanical data

Insertion/withdrawal cycles	> 200
Fixing screws	4-40 UNC
Tightening torque	0.4 Nm

Mechanical tests

Vibration resistance in accordance with EN 60068-2-6/IEC 60068-2-6	Operation: 5g, 10...150 Hz, 2.5 h, in XYZ direction
Shock in accordance with EN 60068-2-27/IEC 60068-2-27	Operation: 15g, 11 ms period, half-sine shock pulse

Environmental and real-life conditions

Ambient conditions

Degree of protection	IP20
Ambient temperature (operation)	-20 °C ... 75 °C
Ambient temperature (storage/transport)	-25 °C ... 80 °C
Altitude	≤ 5000 m (For restrictions, see the manufacturer's declaration for altitude operation)
Permissible humidity (operation)	10 % ... 95 % (non-condensing)
Permissible humidity (storage/transport)	5 % ... 95 % (non-condensing)

Approvals

ATEX

Identification	⟨Ex⟩ II 3 G Ex ec IIC T4 Gc
Certificate	PxCIF14ATEX2744267X

Note	Please follow the special installation instructions in the documentation!

Corrosive gas test

Identification	ISA-S71.04-1985 G3 Harsh Group A

Standards and regulations

Free from substances that could impair the application of coating	VDMA 24364:2018-05

Drawings

Dimensional drawing

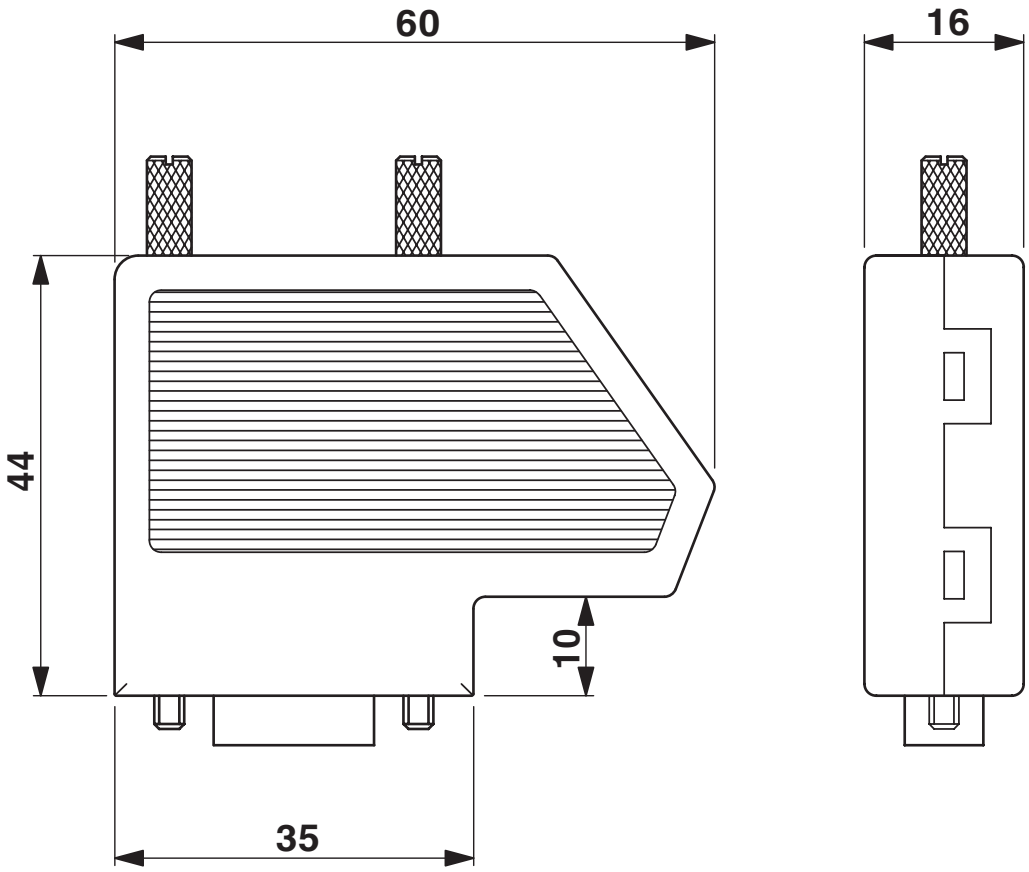

Dimensional drawing SUBCON-PLUS...

Schematic diagram

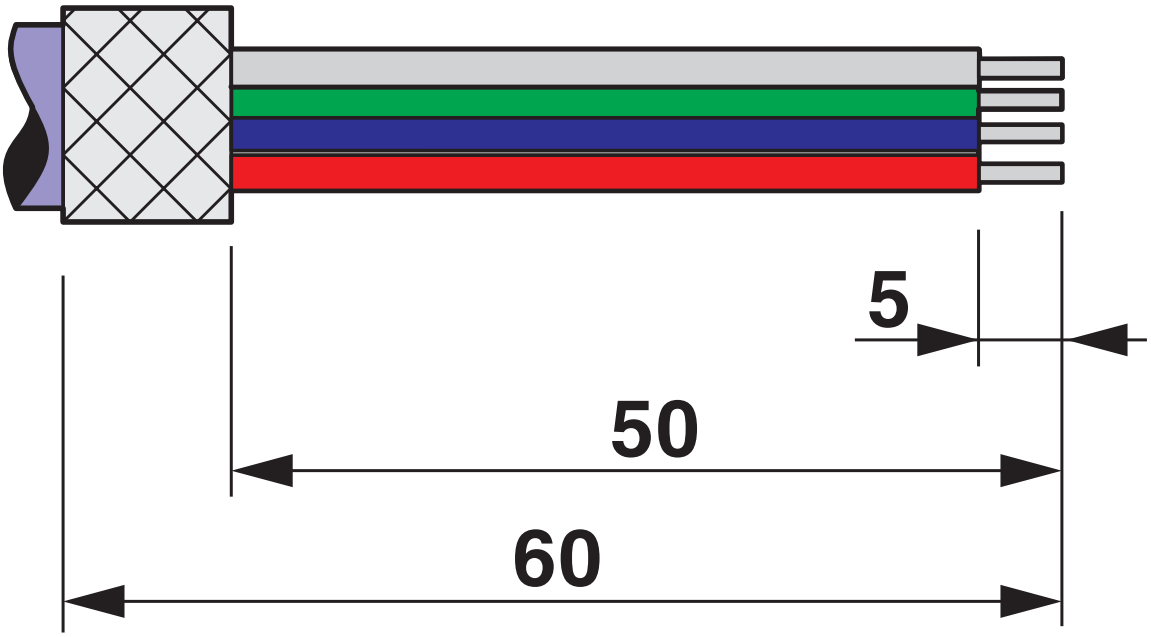

Stripping specifications

Schematic diagram

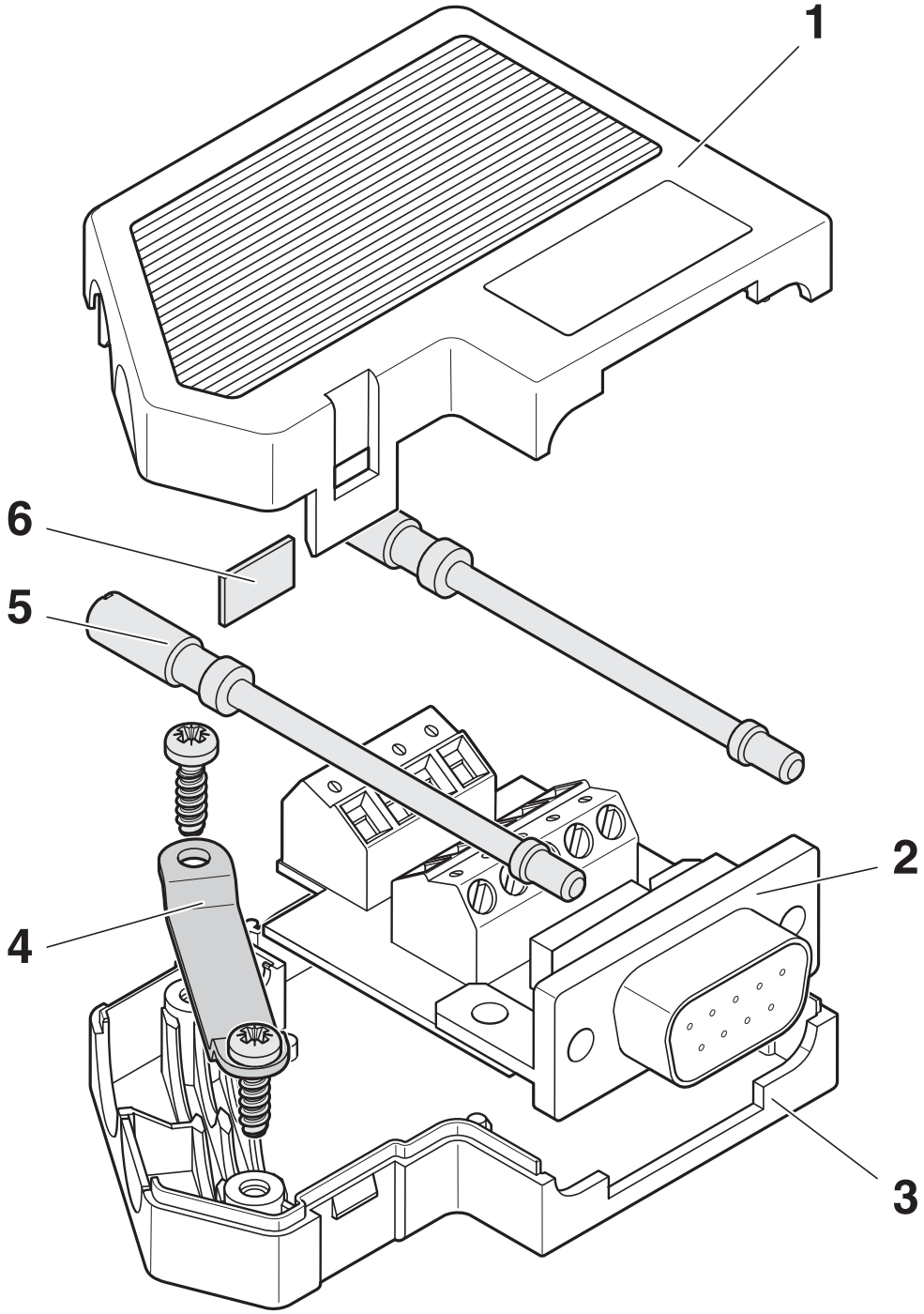

Function elements

Schematic diagram

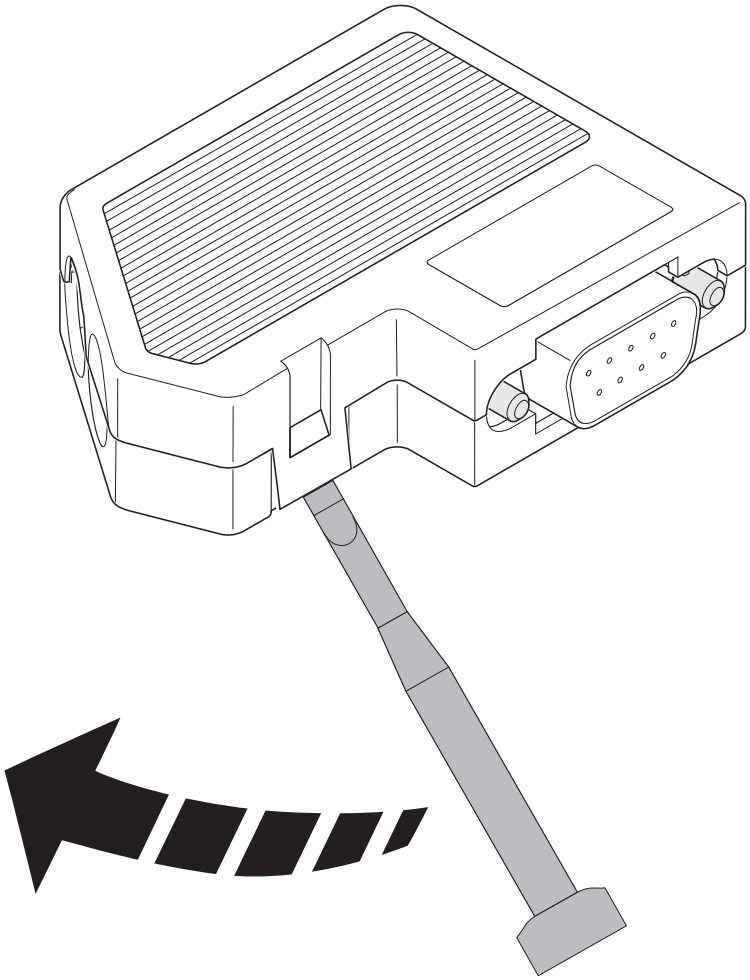

Opening the housing

Schematic diagram

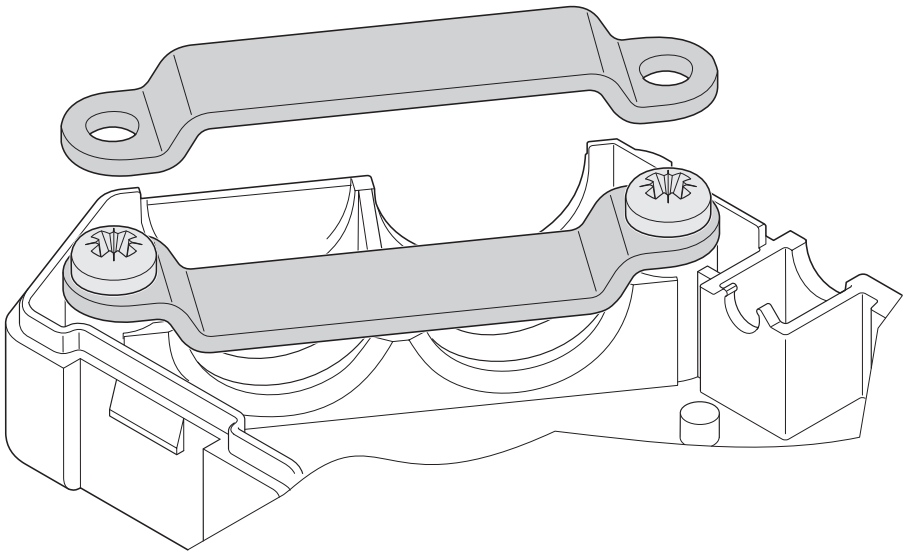

Clip bracket

Schematic diagram

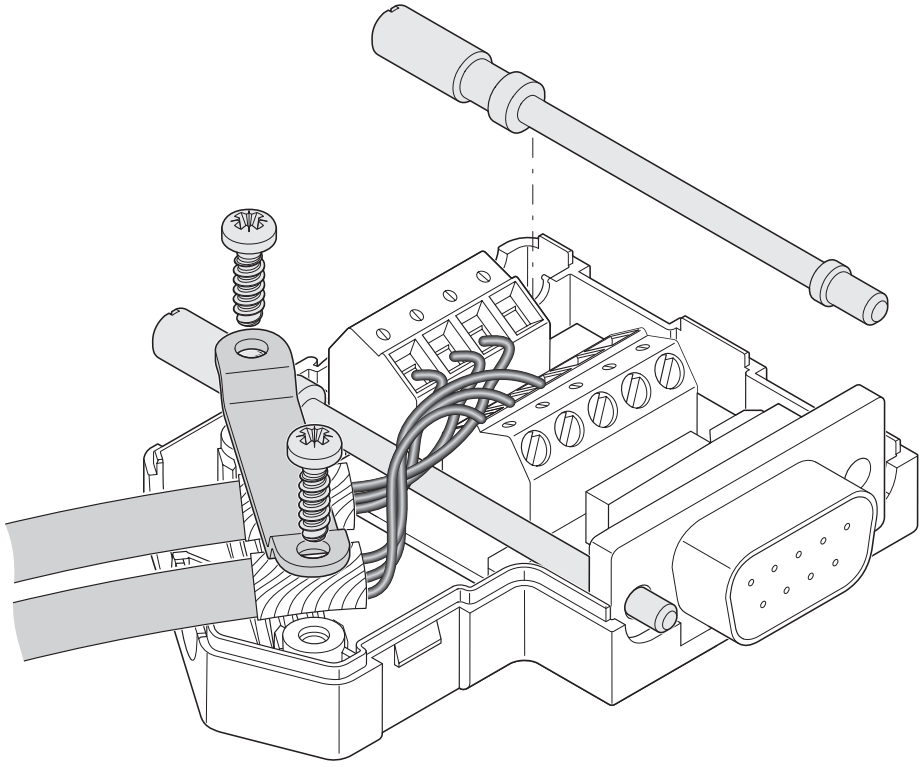

Left-hand side cable entry

Schematic diagram

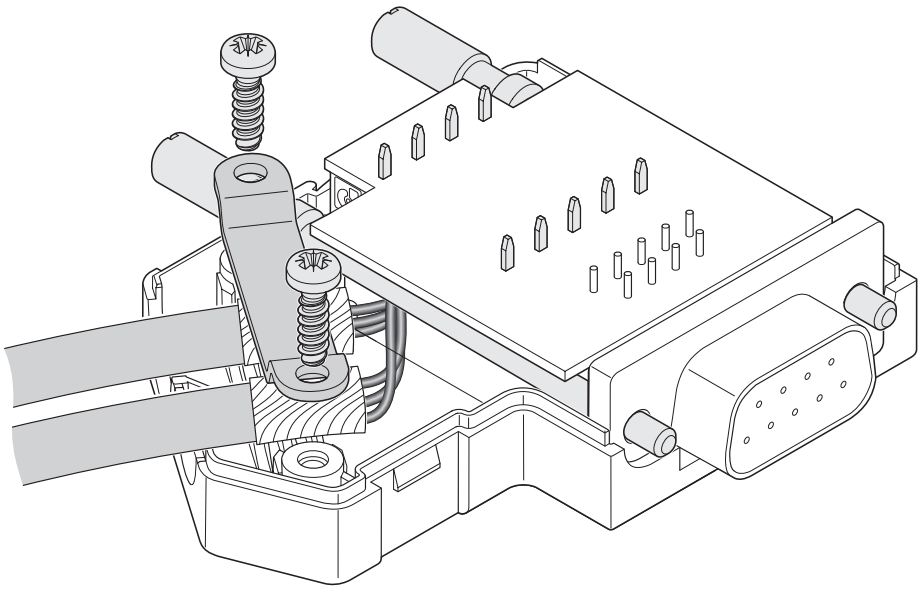

Right-hand side cable entry

Approvals

To download certificates, visit the product detail page: https://www.phoenixcontact.com/us/products/2761871

cULus Recognized
Approval ID: E238705

Classifications

ECLASS

ECLASS-13.0	27440302
ECLASS-15.0	27440322

ETIM

ETIM 10.0	EC001132

UNSPSC

UNSPSC 21.0	39121400

Environmental product compliance

EU RoHS

Fulfills EU RoHS substance requirements	Yes, No exemptions

China RoHS

Environment friendly use period (EFUP)	EFUP-E
	No hazardous substances above the limits

EU REACH SVHC

REACH candidate substance (CAS No.)	No substance above 0.1 wt%

EF3.1 Climate Change

CO2e kg	0.313 kg CO2e

Phoenix Contact 2026 © - all rights reserved
https://www.phoenixcontact.com

Phoenix Contact USA
586 Fulling Mill Road
Middletown, PA 17057, United States
(+717) 944-1300
info@phoenixcon.com