EG 45-GMFP/PC GY - Mounting base housing

2735386

https://www.phoenixcontact.com/us/products/2735386

Please be informed that the data shown in this PDF document is generated from our online catalog. Please find the complete data in the user documentation. Our general terms of use for downloads are valid.



The figure shows fully mounted versions of the electronic housing, in green

Housing base, with metal foot catch and test opening with side cover

Your advantages

- Tool-free mounting

Commercial data

Item number	2735386
Packing unit	10 pc
Minimum order quantity	10 pc
Note	Made to order (non-returnable)
Sales key	AC11
Product key	ACHCGA
GTIN	4017918572167
Weight per piece (including packing)	60.77 g
Weight per piece (excluding packing)	60 g
Customs tariff number	85389099
Country of origin	PL

Technical data

Product properties

Product type	Lower housing part
Housing type	Component housing
Housing series	EG
Product family	EG..-G
Type	Lower housing parts with test opening with side cover, housing cover necessary to complete the module
Number of positions	16
Max. number of positions	0)
Ventilation openings present	no

Dimensions

Dimensional drawing	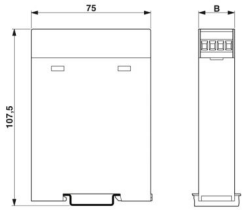
Width	45 mm
Height	75 mm

PCB design

PCB thickness	1.4 mm ... 1.8 mm

Material specifications

Color (Lower housing part)	window gray (RAL 7040)
Material	PC
Flammability rating according to UL 94	V0

Environmental and real-life conditions

Ambient conditions

Max. IP code to attain	IP20
Ambient temperature (operation)	-40 °C ... 105 °C (depending on power dissipation)
Ambient temperature (storage/transport)	-40 °C ... 70 °C
Ambient temperature (assembly)	-5 °C ... 100 °C

PCB data

Thickness of the PCB	1.4 mm ... 1.8 mm

Mounting

Mounting type	DIN rail mounting

Drawings

Dimensional drawing

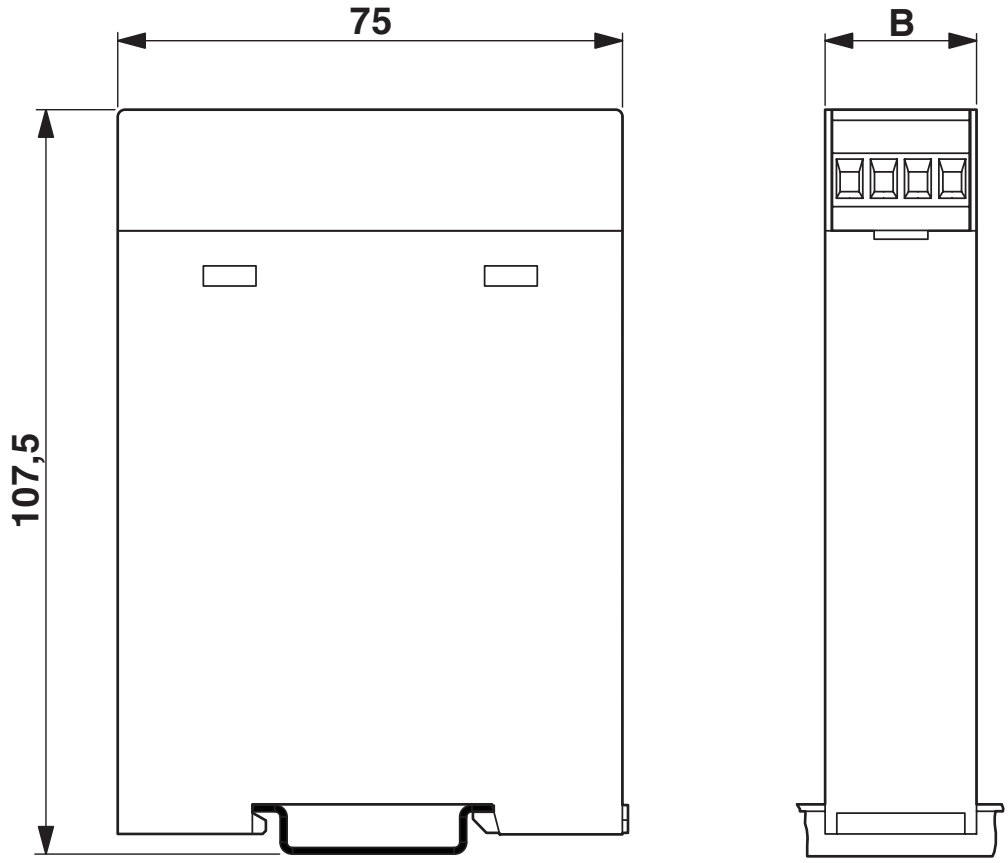

Dimensional drawing

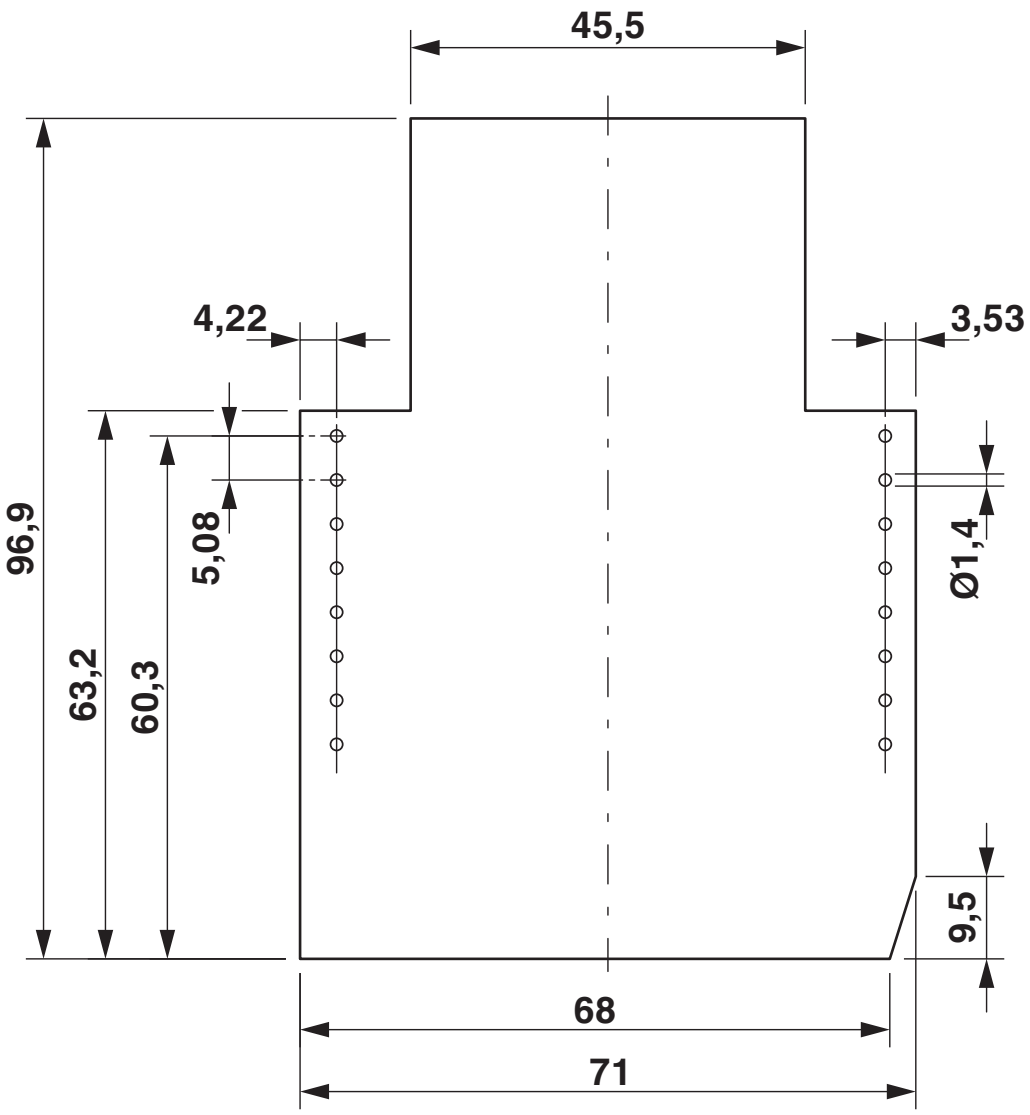

Component mounting side, if the double-level upper part is used

Dimensional drawing

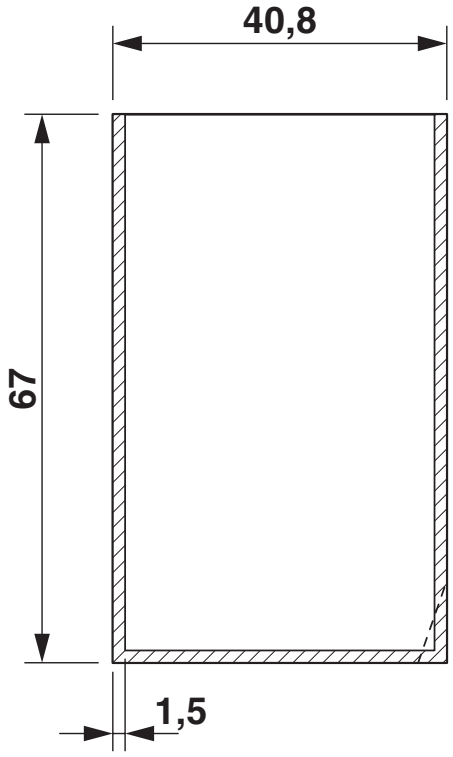

valid for PCB 1; 3; 5 and 6, see explosion drawing

Dimensional drawing

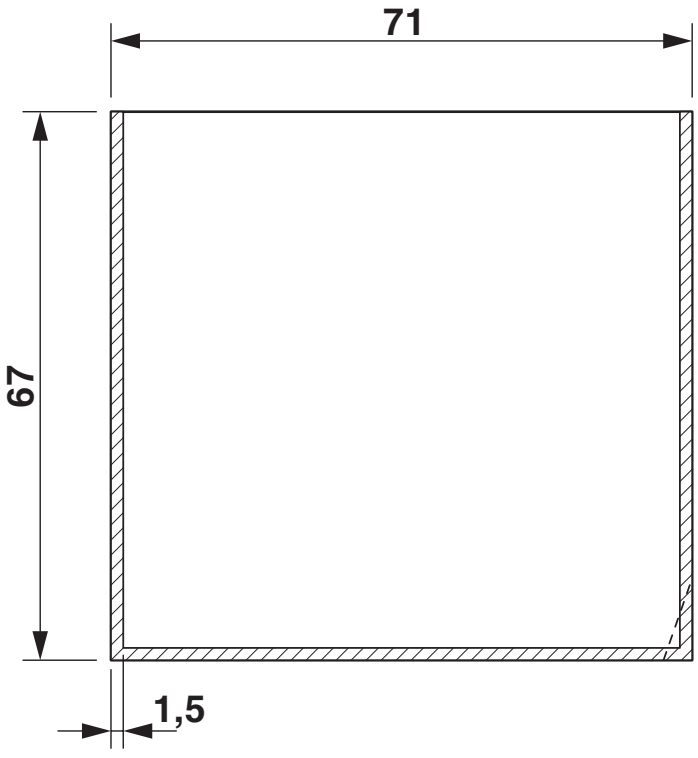

valid for PCB 7 and 12, see explosion drawing

Dimensional drawing

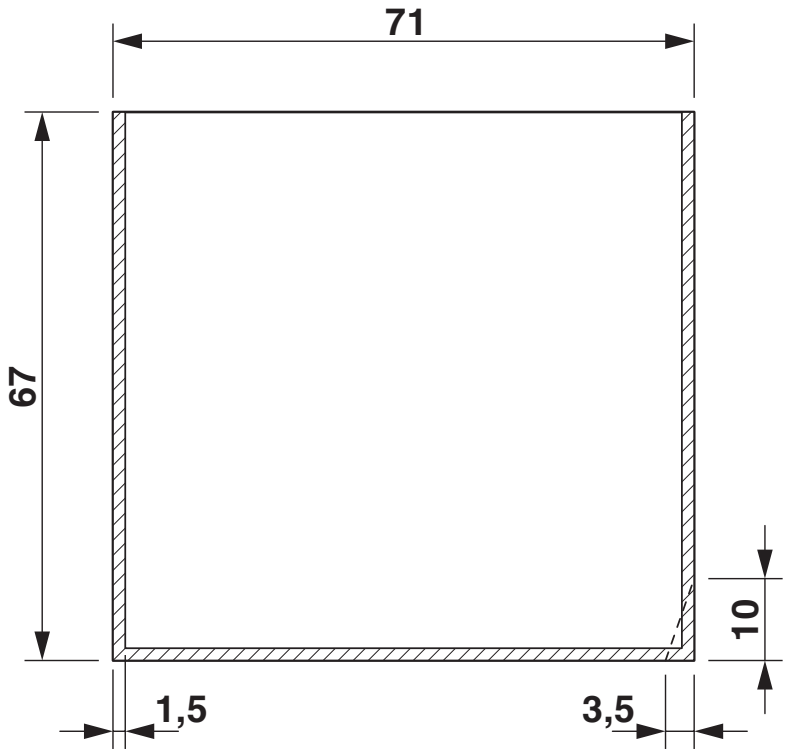

valid for PCB 10, see explosion drawing

Exploded view

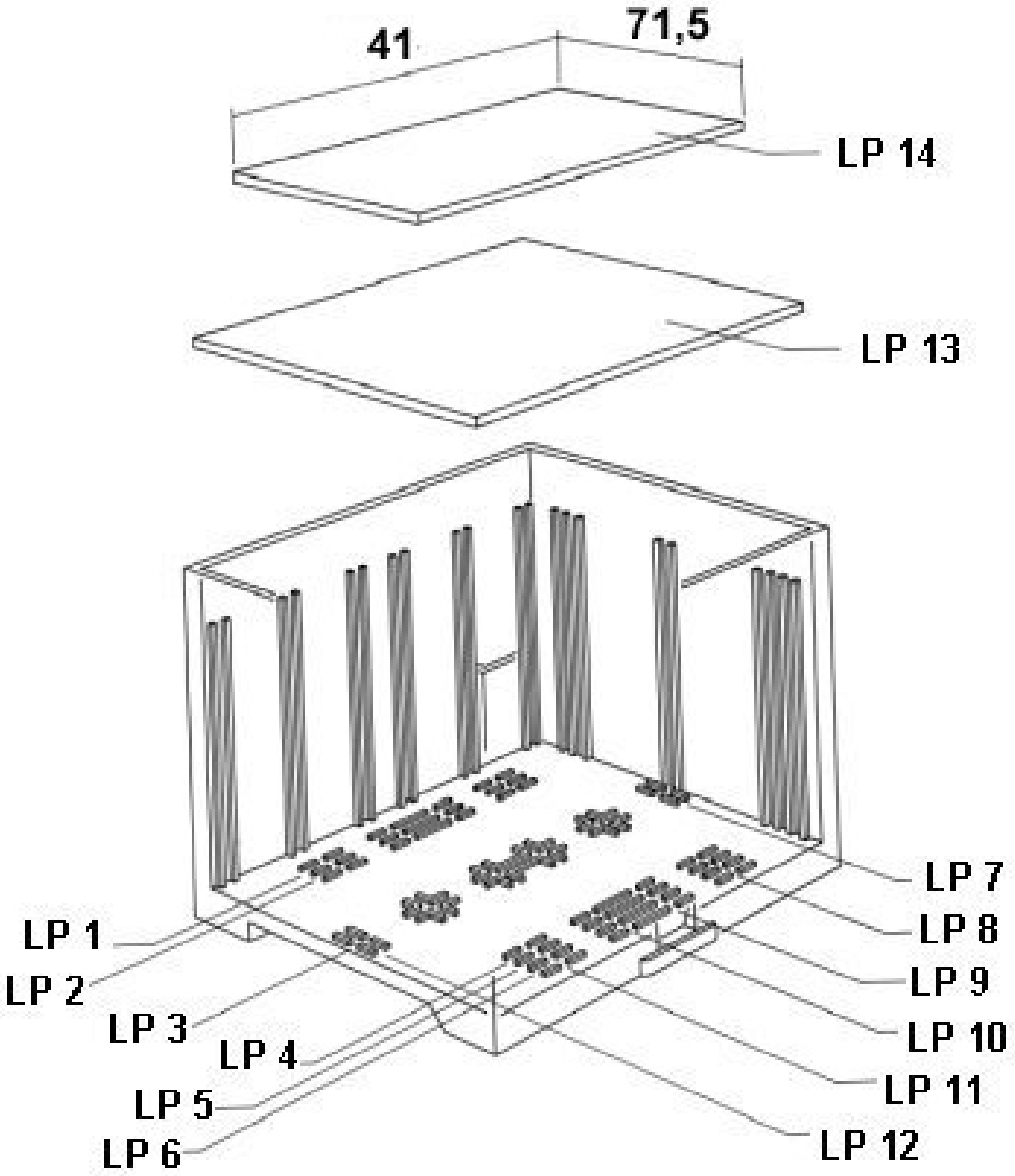

valid for PCB 13

Exploded view

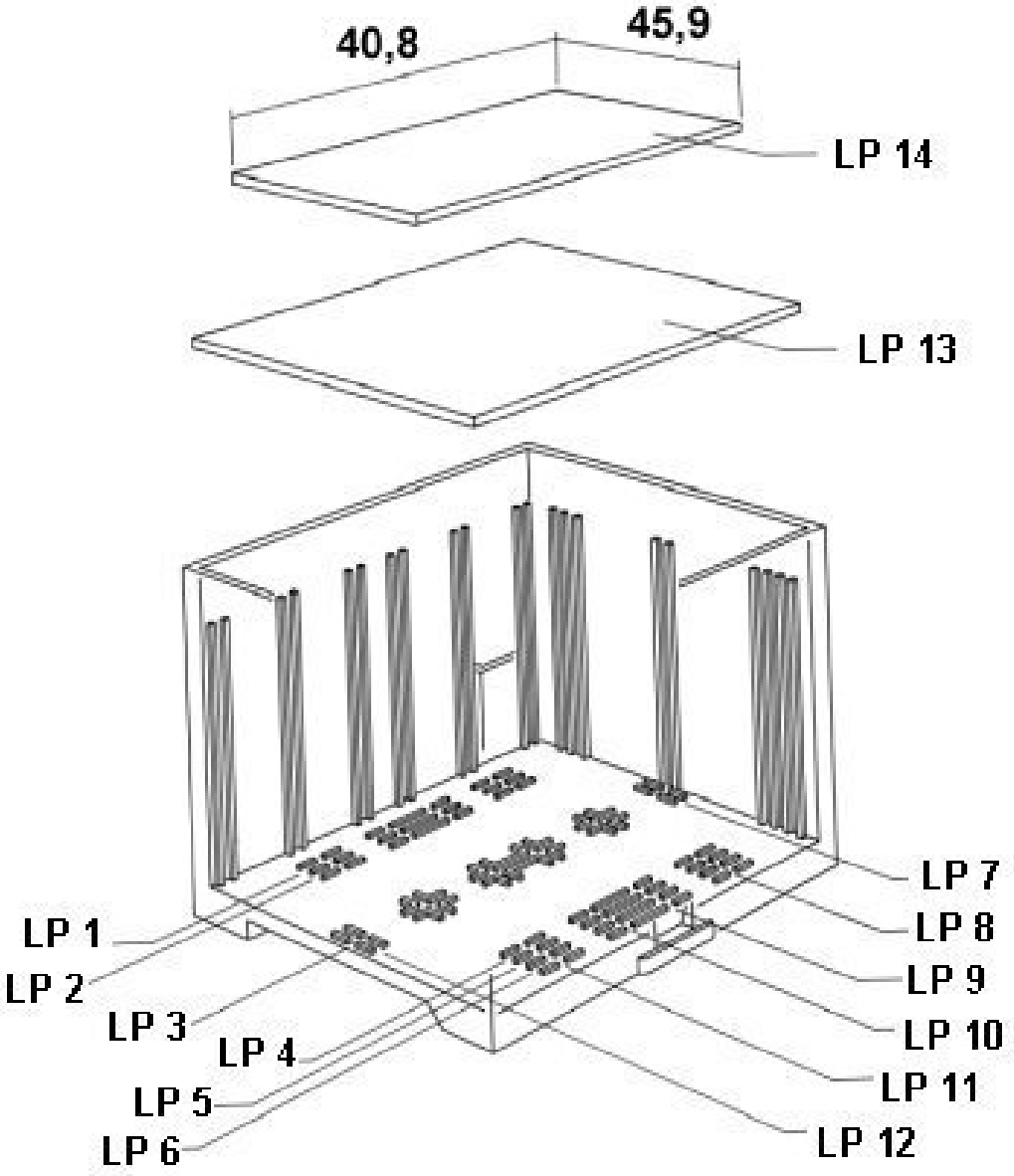

valid for PCB 14

Approvals

To download certificates, visit the product detail page: https://www.phoenixcontact.com/us/products/2735386

UL Recognized
Approval ID: E240868

Classifications

ECLASS

ECLASS-13.0	27190601
ECLASS-15.0	27190601

ETIM

ETIM 10.0	EC002779

UNSPSC

UNSPSC 21.0	31261500

Environmental product compliance

EU RoHS

Fulfills EU RoHS substance requirements	Yes, No exemptions

China RoHS

Environment friendly use period (EFUP)	EFUP-E
	No hazardous substances above the limits

EU REACH SVHC

REACH candidate substance (CAS No.)	No substance above 0.1 wt%

Phoenix Contact 2026 © - all rights reserved
https://www.phoenixcontact.com

Phoenix Contact USA
586 Fulling Mill Road
Middletown, PA 17057, United States
(+717) 944-1300
info@phoenixcon.com