PSI-MOS-RS422/FO1300 E - FO converters

2708575

https://www.phoenixcontact.com/us/products/2708575

Please be informed that the data shown in this PDF document is generated from our online catalog. Please find the complete data in the user documentation. Our general terms of use for downloads are valid.



Fiber optic converter with integrated optical diagnostics, alarm contact, for RS-422/RS-485 4 wire/ INTERBUS up to 2 Mbps, termination device with one fiber optic interface (SC duplex), 1300 nm, for fiberglass cable

Your advantages

- Connections can be plugged in via a COMBICON screw terminal block
- Supply voltage routed through via DIN rail connectors
- Redundant power supply possible by means of optional system power supply unit
- High-quality electrical isolation between all interfaces (INTERBUS // FO ports // supply // DIN rail connector)
- Approved for use in zone 2
- Floating switch contact for advance warning of critical FO paths
- Integrated optical diagnostics for continuous monitoring of FO paths
- Automatic data rate detection for all data rates up to 2 Mbps
- Shipbuilding approval in accordance with DNV GL

Commercial data

Item number	2708575
Packing unit	1 pc

Minimum order quantity	1 pc
Sales key	DN06
Product key	DNC216
GTIN	4046356176293
Weight per piece (including packing)	253.633 g
Weight per piece (excluding packing)	190.68 g
Customs tariff number	85176200
Country of origin	DE

Technical data

Notes

Note on application	Only for industrial use
Note on application	As things stand now, we are preparing the product so that, as of December 11, 2027, it will comply with the requirements of the EU Cyber Resilience Act (CRA) based on the information currently available regarding the CRA.

Utilization restriction

CCCex note	Use in potentially explosive areas is not permitted in China.

Product properties

Product type	Media converter
Product family	PSI-MOS
MTTF	891 Years (SN 29500 standard, temperature 25°C, operating cycle 21%)
	397 Years (SN 29500 standard, temperature 40°C, operating cycle 34.25%)
	164 Years (SN 29500 standard, temperature 40°C, operating cycle 100%)
MTBF	544 Years (Telcordia standard, 25°C temperature, 21% operating cycle (5 days a week, 8 hours a day))
	113 Years (Telcordia standard, 40°C temperature, 34.25% operating cycle (5 days a week, 12 hours a day))

Electrical properties

Electrical isolation	VCC // RS-422
Maximum power dissipation for nominal condition	2.75 W
Test voltage data interface/power supply	1.5 kV_{rms} (50 Hz, 1 min.)

Supply

Supply voltage range	18 V DC ... 32 V DC
Nominal supply voltage	24 V DC
Typical current consumption	110 mA (24 V DC)
Max. current consumption	≤ 2 A (For operation in a joining station, via the DIN rail connector)

Output data

Switching

Output name	Relay output
Output description	Alarm output
Number of outputs	1
Maximum switching voltage	60 V DC
	42 V AC
Limiting continuous current	1 A

Connection data

Supply

Connection method	COMBICON plug-in screw terminal block
Tightening torque	0.56 Nm ... 0.79 Nm

Interfaces

Bit distortion, input	± 35 % (permitted)
Bit distortion, output	< 6.25 %
Signal	INTERBUS
Transmission channels	2 (1/1) RD, TD, full duplex

Data: optical FO

No. of channels	1
Transmit capacity, minimum	-3.4 dBm (50/125 µm, multimode fiberglass)
	-4.7 dBm (62.5/125 µm, multimode fiberglass)
	-5.5 dBm (9/125 µm, singlemode fiberglass)
Transmission length incl. 3 dB system reserve	27 km (With F-G 50/125 0.7 dB/km at 1300 nm)
	22 km (with F-G 62.5/125 0.8 dB/km at 1300 nm)
	45 km (With F-E 9/125 0,4 dB/km at 1300 nm)
Transmission protocol	Transparent to protocol for RS-422 interface
Connection method	SC duplex
Wavelength	1300 nm
Minimum receiver sensitivity	-25.5 dBm (50/125 µm)
	-25.5 dBm (62,5/125 µm)
	-26.5 dBm (9/125 µm)
Maximum receiver sensitivity	0 dBm
Transmission medium	Multi-mode fiberglass
	Single-mode fiberglass

Data: RS-422 interface in acc. with ITU-T V.11, EIA/TIA-422, DIN 66348-1

Serial transmission speed	≤ 2 Mbps
Connection method	Pluggable screw connection
Tightening torque	0.56 Nm ... 0.79 Nm
Transmission length	≤ 1000 m (depending on the data rate, with shielded, twisted data cable)
Termination resistor	220 Ω
	100 Ω
	220 Ω
Single conductor/terminal point, rigid	0.2 mm² ... 2.5 mm²
Single-wire/terminal point, flexible	0.2 mm² ... 2.5 mm²
Max. AWG conductor cross-section, flexible	14
Min. AWG conductor cross-section, flexible	24
Single-wire/terminal point, rigid AWG max.	14
Single-wire/terminal point, rigid AWG min.	24

Stripping length	7 mm
Transmission medium	Copper
File format/coding	UART (11 Bit, NRZ)

Dimensions

Dimensional drawing	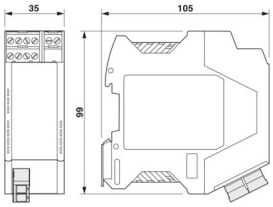
Width	35 mm
Height	105 mm
Depth	103 mm

Material specifications

Color (Housing)	green (RAL 6021)
Material (Housing)	PA 6.6-FR

Cable/line

FO cable

Fiber types	50/125 µm
	9/125 µm
	Fiberglass

Mechanical tests

Vibration resistance in accordance with EN 60068-2-6/IEC 60068-2-6	Operation: 5g, 10...150 Hz, 2.5 h, in XYZ direction
Shock in accordance with EN 60068-2-27/IEC 60068-2-27	Operation: 15g, 11 ms period, half-sine shock pulse

Environmental and real-life conditions

Ambient conditions

Degree of protection	IP20
Ambient temperature (operation)	-20 °C ... 60 °C
Ambient temperature (storage/transport)	-40 °C ... 85 °C
Altitude	≤ 5000 m (For restrictions, see the manufacturer's declaration for altitude operation)
Permissible humidity (operation)	30 % ... 95 % (non-condensing)

Approvals

CE

Certificate	CE-compliant

ATEX

Identification	II 3 G Ex ec nC IIC T4 Gc
Certificate	PxCIF07ATEX2708559X
Note	Please follow the special installation instructions in the documentation!

UL, USA/Canada

Identification	508 Listed
	508 Recognized

KC approval for South Korea

Certificate	MSIP-REI-PCK-2708575

Corrosive gas test

Identification	ISA-S71.04-1985 G3 Harsh Group A

Shipbuilding

Identification	DNV GL

Shipbuilding data

Temperature	B
Humidity	A
Vibration	A
EMC	B
Enclosure	Required protection according to the Rules shall be provided upon installation on board

EMC data

Electromagnetic compatibility	Conformance with EMC Directive 2014/30/EU
Noise immunity	EN 61000-6-2:2005

Noise emission

Standards/regulations	EN 55011

Electrostatic discharge

Standards/regulations	EN 61000-4-2

Electrostatic discharge

Contact discharge	± 6 kV
Discharge in air	± 8 kV
Comments	Criterion B

Electromagnetic HF field

Standards/regulations	EN 61000-4-3

Electromagnetic HF field

Field intensity	10 V/m
Comments	Criterion A

Fast transients (burst)

Standards/regulations	EN 61000-4-4

Fast transients (burst)

Input	± 2 kV
Signal	± 2 kV
Comments	Criterion B

Surge current load (surge)

Standards/regulations	EN 61000-4-5

Surge current load (surge)

Input	± 0.5 kV
Signal	± 1 kV
Comments	Criterion B

Conducted interference

Standards/regulations	EN 61000-4-6

Conducted interference

Comments	Criterion A
Voltage	10 V

Emitted interference

Standards/regulations	EN 55011
Comments	Class A, industrial applications

Criteria

Criterion A	Normal operating behavior within the specified limits.
Criterion B	Temporary impairment to operational behavior that is corrected by the device itself.

Standards and regulations

Free from substances that could impair the application of coating	VDMA 24364:2018-05

Mounting

Mounting type	DIN rail mounting
Assembly note	The product can be snapped onto all 35 mm DIN rails in accordance with EN/IEC 60715.
Useable DIN rail type	DIN rail: 35 mm

Drawings

Dimensional drawing

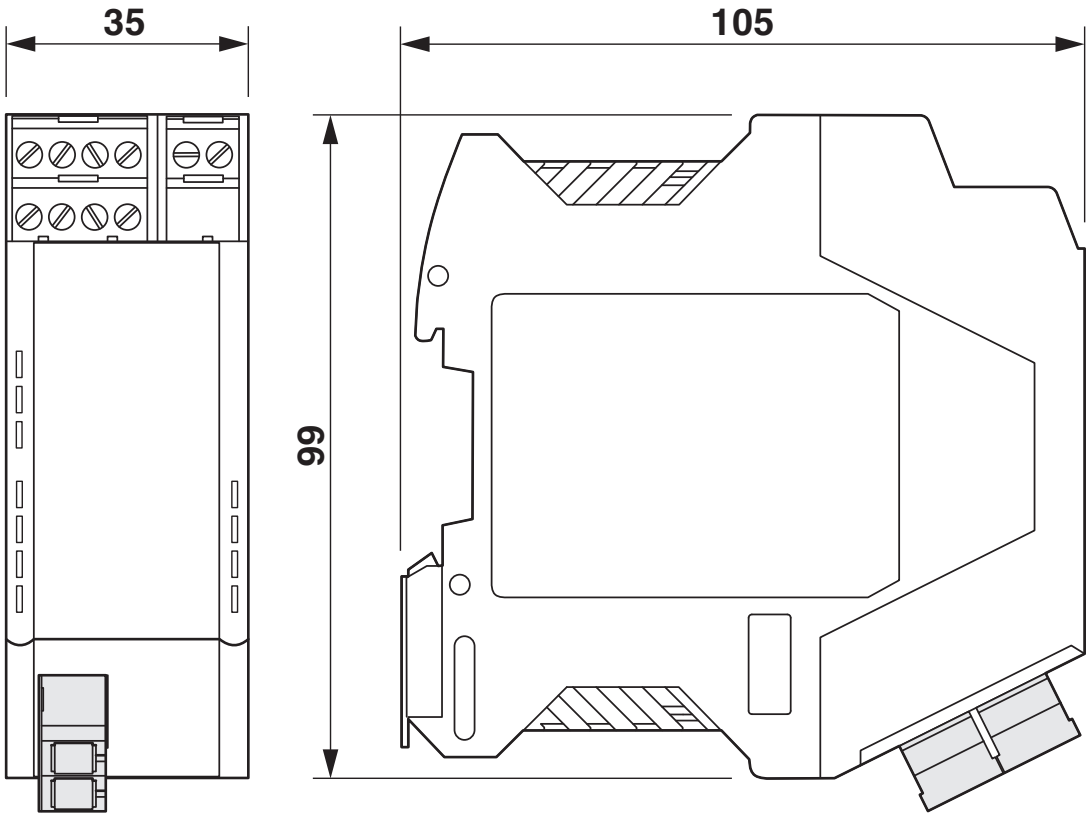

Housing dimensions

Application drawing

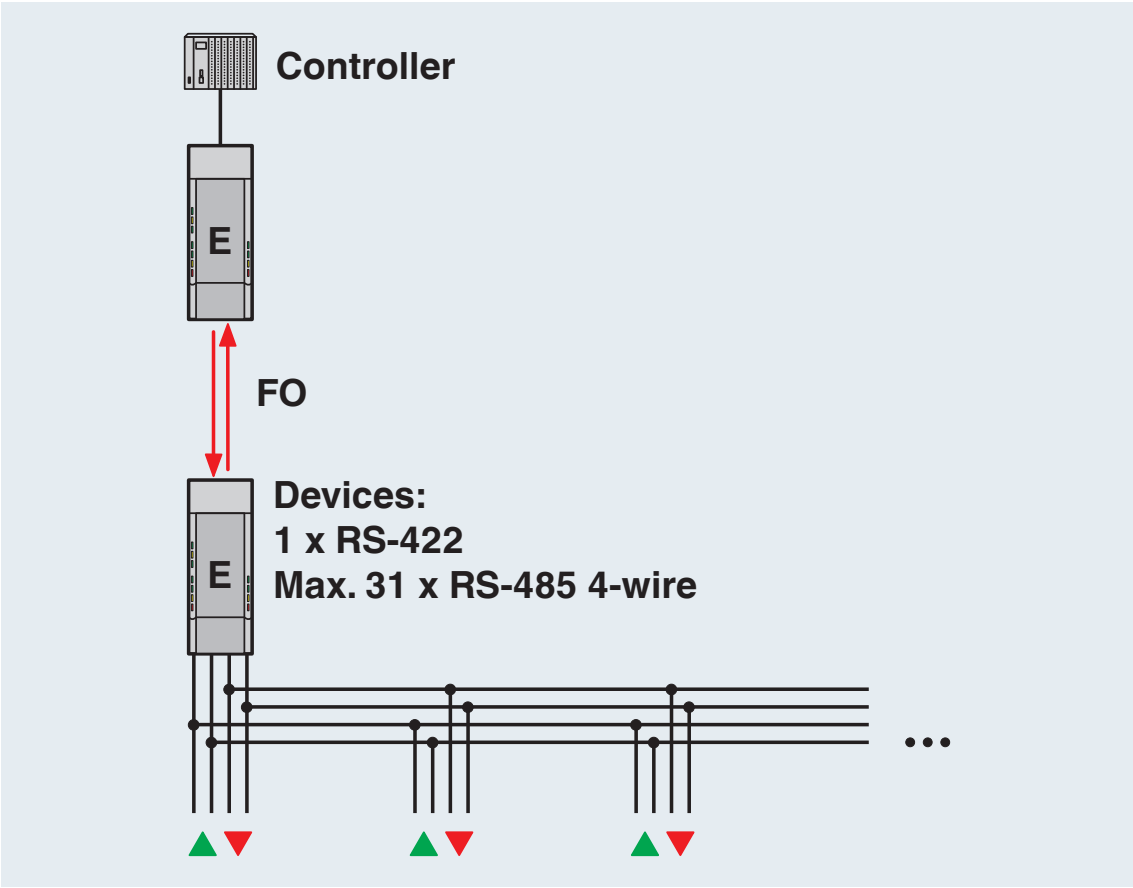

Point-to-point connection

Application drawing

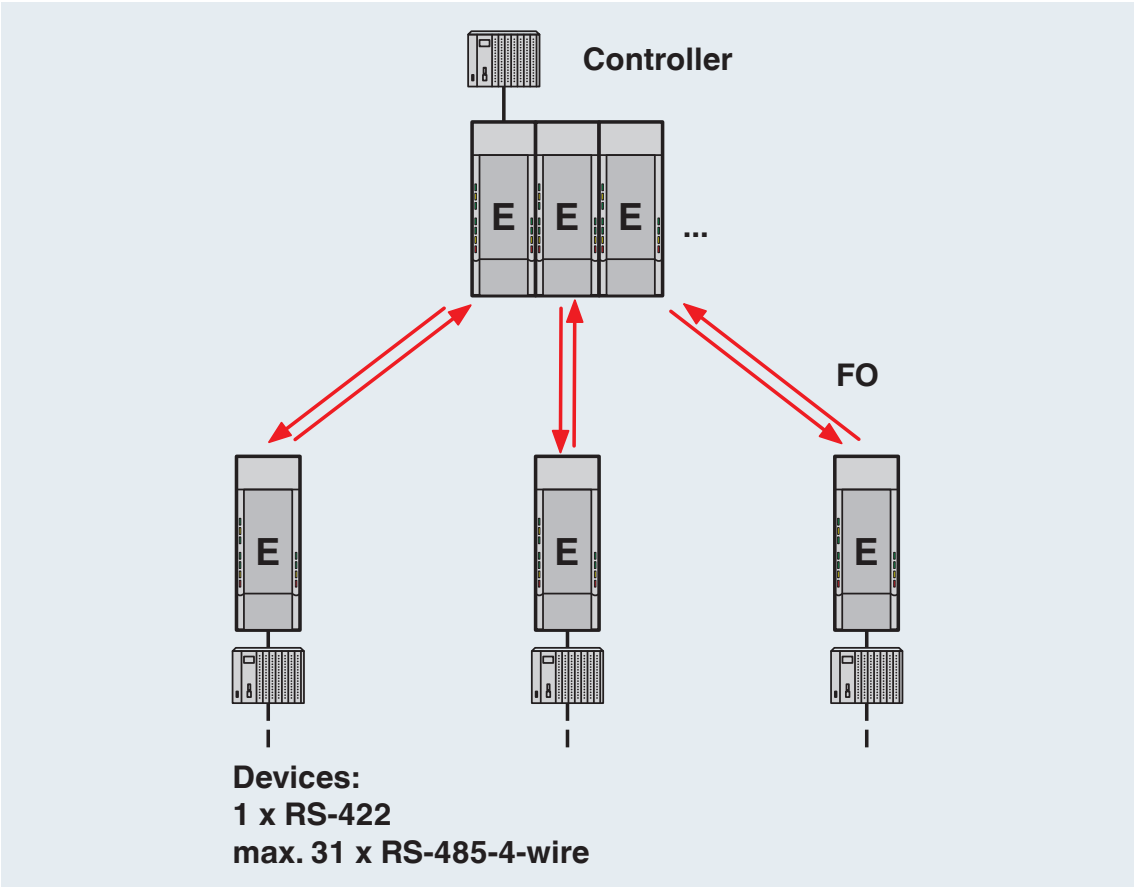

Star structure

Application drawing

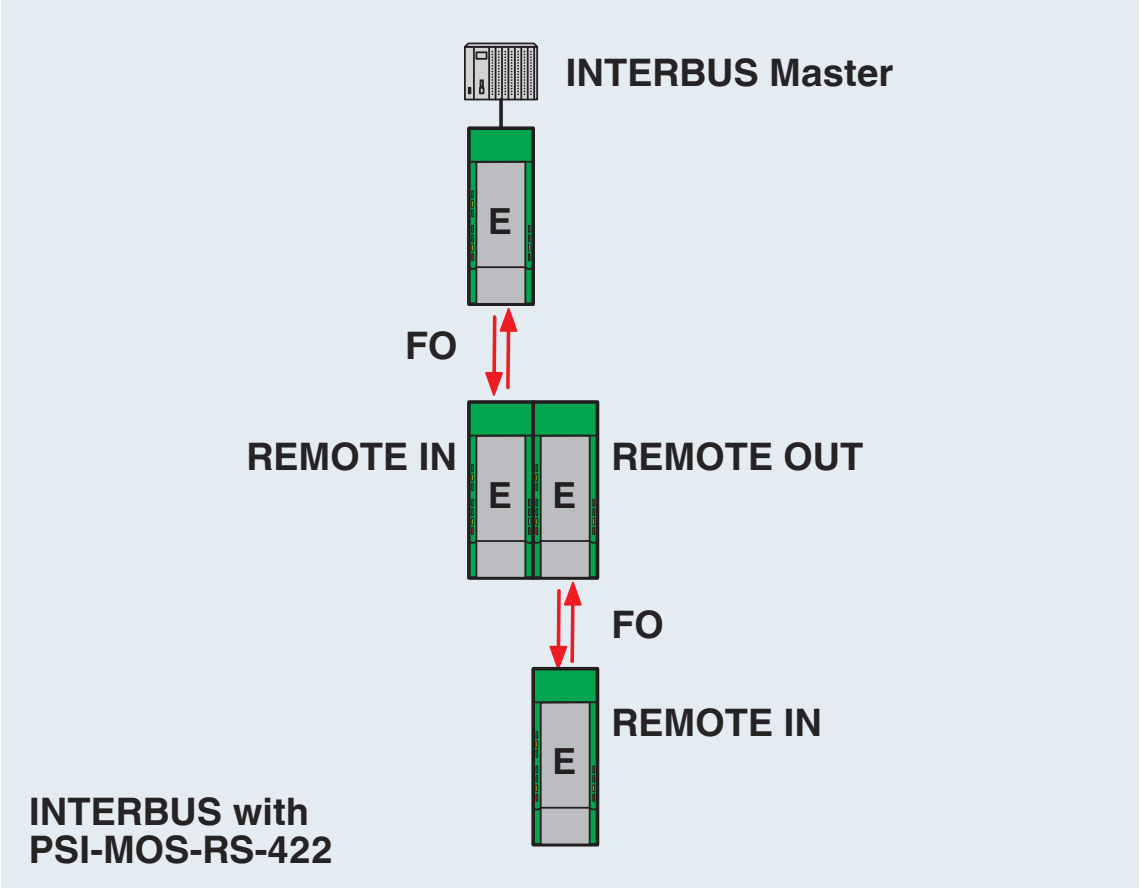

INTERBUS with PSI-MOS-RS422...

Approvals

To download certificates, visit the product detail page: https://www.phoenixcontact.com/us/products/2708575

KC
Approval ID: MSIP-REI-PCK-2708575

cULus Listed
Approval ID: E238705

cULus Recognized
Approval ID: E238705

DNV GL
Approval ID: TAA00001KR_7

Classifications

ECLASS

ECLASS-13.0	19170411
ECLASS-15.0	19170411

ETIM

ETIM 10.0	EC001467

UNSPSC

UNSPSC 21.0	43201500

Environmental product compliance

EU RoHS

Fulfills EU RoHS substance requirements	Yes
Exemption	7(a), 7(c)-I

China RoHS

Environment friendly use period (EFUP)	EFUP-50
	An article-related China RoHS declaration table can be found in the download area for the respective article under "Manufacturer declaration". For all articles with EFUP-E, no China RoHS declaration table issued and required.

EU REACH SVHC

REACH candidate substance (CAS No.)	1-Methyl-2-pyrrolidone (NMP)(CAS: 872-50-4)
	Lead(CAS: 7439-92-1)
SCIP	6cee866a-b6da-473c-97f7-5b30cfc18f31

Phoenix Contact 2026 © - all rights reserved
https://www.phoenixcontact.com

Phoenix Contact USA
586 Fulling Mill Road
Middletown, PA 17057, United States
(+717) 944-1300
info@phoenixcon.com