PSR-CT-M-SEN-1-8 - Safety switch sensor

2702975

https://www.phoenixcontact.com/us/products/2702975

Please be informed that the data shown in this PDF document is generated from our online catalog. Please find the complete data in the user documentation. Our general terms of use for downloads are valid.

CRA-READY



The figure shows a product version of the article

Proximity safety circuit up to Cat. 4, PL e (EN ISO 13849), SIL 3 (IEC 61508), multicode sensor with RFID coding, model 4 (EN ISO 14119), automatic or manual start, integrated diagnostics, 24 V DC supply, IP69K, M12 connector

Product description

The PSR-CT safety circuit consists of a combination of a PSR-CT-...-SEN-1-8 sensor with varying coding types and a coded PSR-CT-C-ACT actuator. It provides maximum tamper protection and the highest level of safety in accordance with EN ISO 14119. The PSR-CT safety circuit is available with the following types of coding: Fixcode: For the sensor to detect the actuator, the actuator must first be associated with the sensor via a learning process. The learning process can only be completed once. The sensor and actuator are then permanently assigned to each other by their coding. Safety circuits with fixcode evaluation achieve a high coding level. Unicode: For the sensor to detect the actuator, the actuator must first be assigned to the sensor via a learning process. The learning process for a new actuator can be repeated any number of times. The sensor only detects the last learned actuator. Safety circuits with unicode evaluation achieve a high coding level. Multicode: The sensor detects every actuator of the approved type. No specific actuator code can be assigned. Safety circuits with multicode evaluation achieve a low coding level.

Your advantages

- Integrated reset function on the switch
- 4 actuation settings, 3 travel directions
- Tamper protection via RFID transponder technology
- Rapid diagnostics, thanks to comprehensive status information
- Consistent M12 connection technology for convenient installation
- Safe series connection in accordance with EN ISO 14119
- Flexible use, thanks to compact design
- Safe, cost-effective complete solution

Commercial data

Item number	2702975
Packing unit	1 pc

Minimum order quantity	1 pc
Sales key	DN04
Product key	DNA611
GTIN	4055626447025
Weight per piece (including packing)	41.03 g
Weight per piece (excluding packing)	40.3 g
Customs tariff number	85365019
Country of origin	DE

Technical data

Notes

Note on application	Only for industrial use
Note on application	As things stand now, we are preparing the product so that, as of December 11, 2027, it will comply with the requirements of the EU Cyber Resilience Act (CRA) based on the information currently available regarding the CRA.

Product properties

Product type	Safety switches
Product family	PSR-CT
Technology	Transponder
Application	Safety door monitoring
	Position monitoring
Design in accordance with EN ISO 14119	4
Special properties	The product is being prepared for compliance with the Cyber Resilience Act (CRA)
Encoding level in accordance with EN ISO 14119	low

Insulation characteristics

Protection class	III
Degree of pollution	3

Times

Discrepancy time	max. 10 ms (between the safety outputs)
Switch-on delay	typ. 5 s (after switching U_B on)
Switch-on time	max. 400 ms (for the safety outputs)
Risk time	max. 125 ms (Stand-alone device)
Test pulses	typ. 300 µs (Test pulse duration)
	approx. 100 ms (Test pulse interval)
Delay time	typ. 10 ms (Risk time delay per device)

Electrical properties

Switching frequency	max. 1 Hz
Short-circuit current	typ. 100 A (conditional short-circuit current)
Switching frequency	max. 1 Hz
Rated insulation voltage	max. 300 V
Rated surge voltage	max. 1.5 kV

Supply

Supply voltage	24 V DC ±15 % (PELV, controlled, residual ripple < 5%)
Current consumption	max. 40 mA
Protection	min. 0.25 A (to be performed externally)
	max. 8 A (to be performed externally)
Contact switching type	2 safe digital outputs

Output data

Signal

Designation	DGN
Output description	p-wired
Number of outputs	1
Output voltage	min. (U_B - 1.5 V (HIGH))
	max. (U_B (HIGH))
	min. 0 V DC (LOW)
	max. 1 V DC (LOW)
Current	min. 1 mA
	max. 50 mA
Short-circuit-proof	yes

Safety output

Designation	FO1A, FO1B
Output description	Semiconductor outputs, p-wired
Number of outputs	2
Output voltage	min. (U_B - 1.5 V (HIGH FO1A, FO1B))
	max. (U_B (HIGH FO1A, FO1B))
	min. 0 V DC (LOW FO1A/FO1B)
	max. 1 V DC (LOW FO1A/FO1B)
Switching current	min. 1 mA (per safety output)
	max. 150 mA (per safety output)
Residual current	≤ 0.25 mA
Utilization category in accordance with IEC 60947-5-2	150 mA (24 V (DC13))
Short-circuit-proof	yes
Note on protection circuit	NOTE: Protect the outputs under inductive loads with a freewheeling diode.

Connection data

Connection technology

Connection technology	M12 connector
pluggable	no
Number of positions	8

Conductor connection

Connection method	Connector
Connection technology	M12 connector
Number of positions	8

Signaling

Status display	2 LEDs

Dimensions

Dimensional drawing	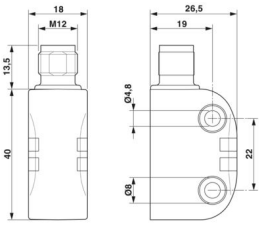
Width	26.5 mm
Height	40 mm
Depth	18 mm

Material specifications

Color (Housing)	yellow (RAL 1018)
Housing material	PBT

Characteristics

Safety data: EN ISO 13849

Performance level (PL)	e

Safety data: IEC 61508 - High demand

Safety Integrity Level (SIL)	3

Environmental and real-life conditions

Ambient conditions

Degree of protection	IP65/IP67/IP69/IP69K
	IP67 (with SAC cabling)
Ambient temperature (operation)	-25 °C ... 55 °C
Ambient temperature (storage/transport)	-40 °C ... 70 °C
Vibration (operation)	in accordance with EN 60947-5-2

Approvals

Conformity/Approvals

EMC conformance	EN 60947-5-3

Mounting

Mounting type	Mounting panel
Assembly note	Note EN ISO 14119
	max. tightening torque to secure: 0.8 Nm
Mounting position	any
Minimum distance	140 mm (between two safety circuits)
	7 mm (between sensor and actuator when traveling in the Y-direction)

Drawings

Dimensional drawing

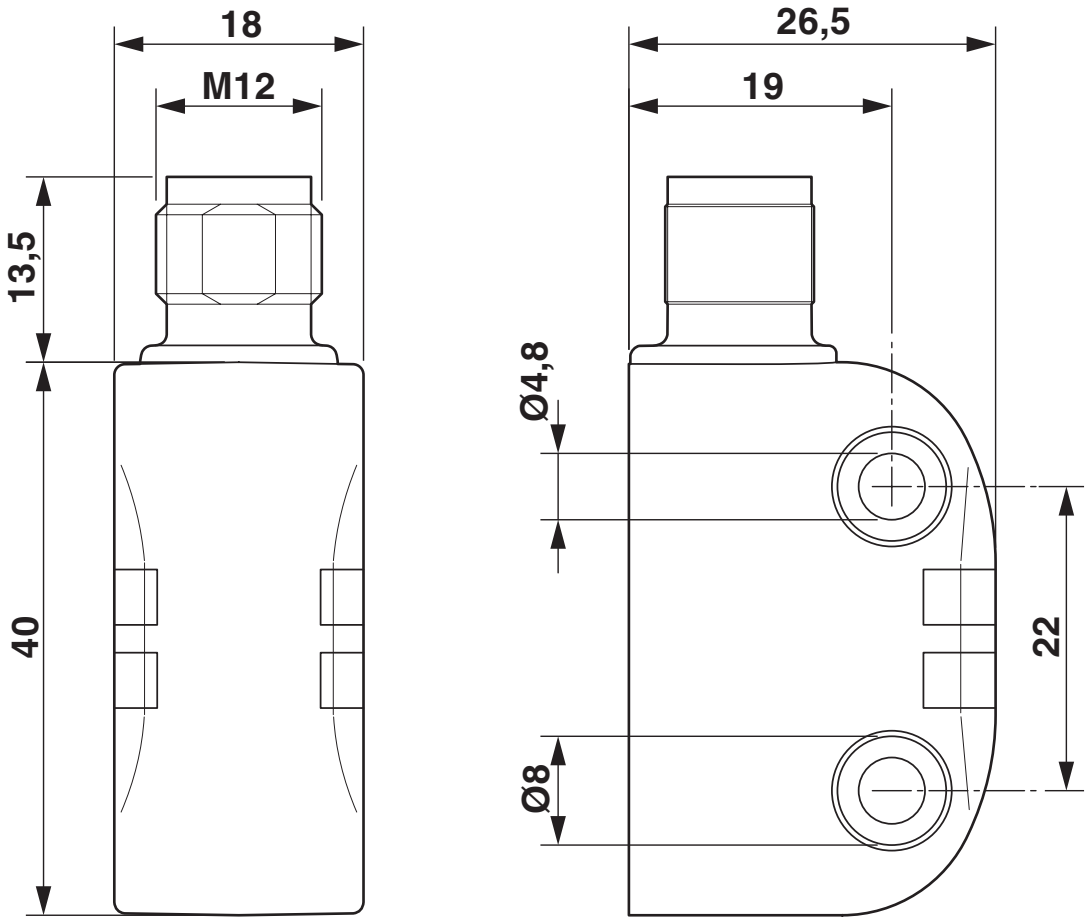

Application drawing

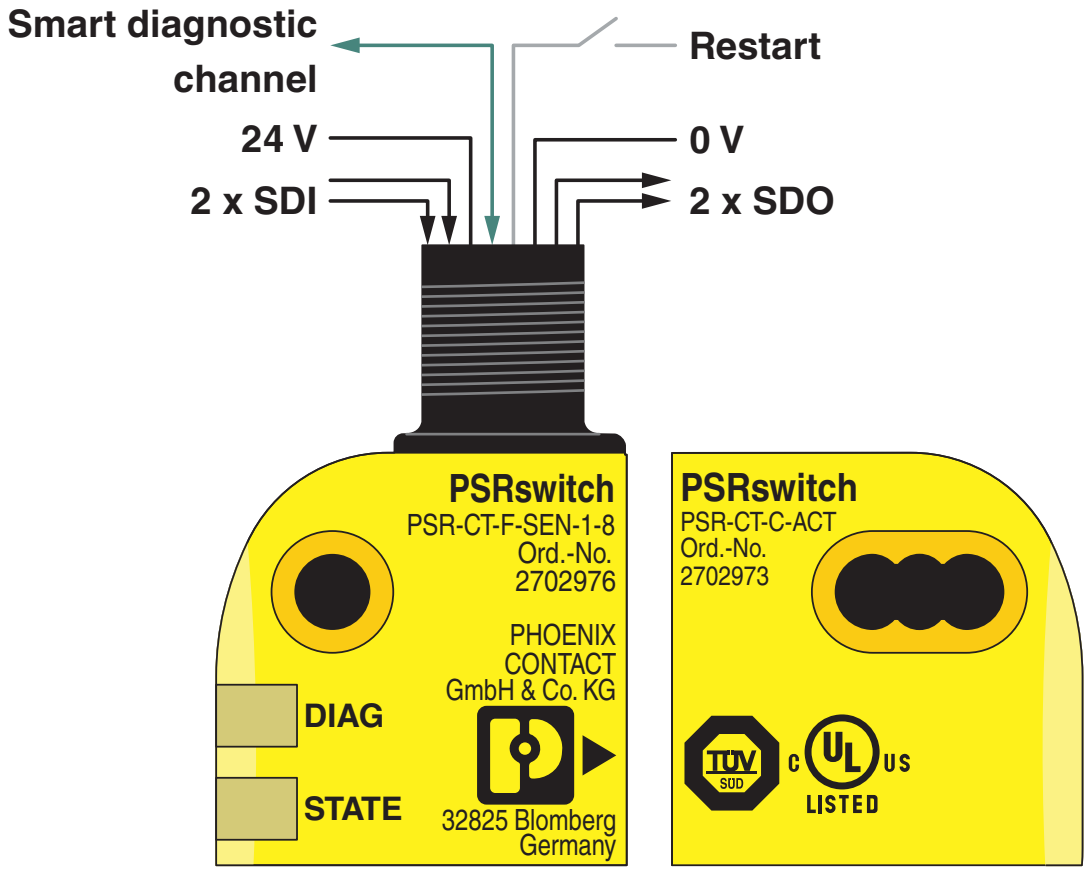

Application drawing

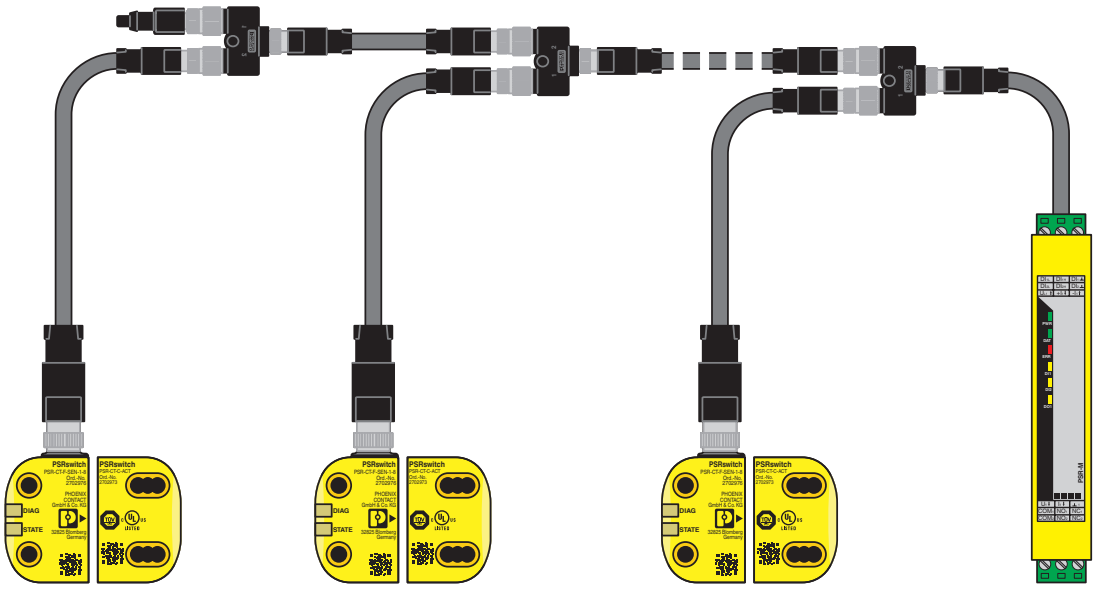

Application drawing

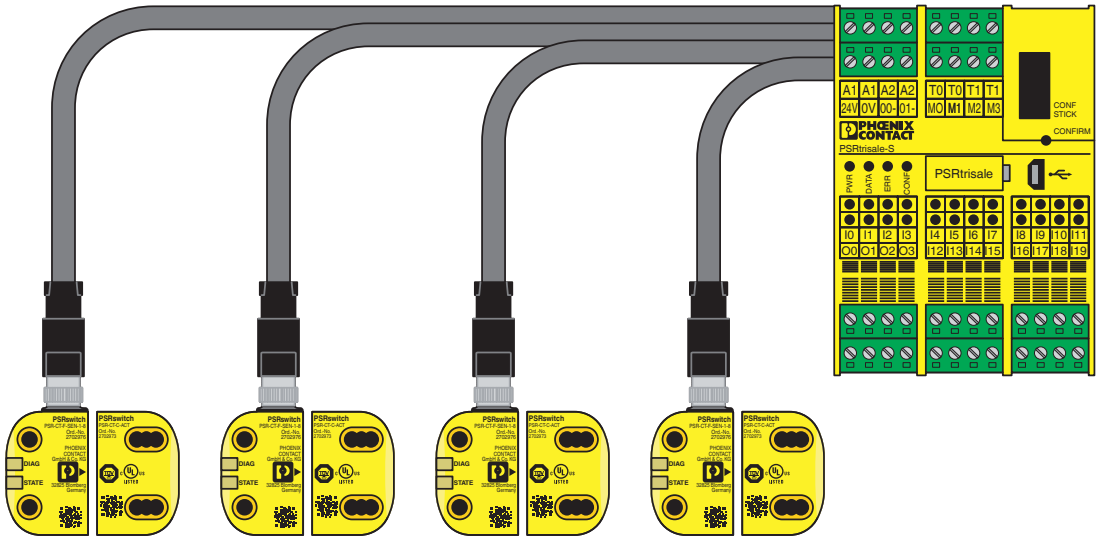

Application drawing

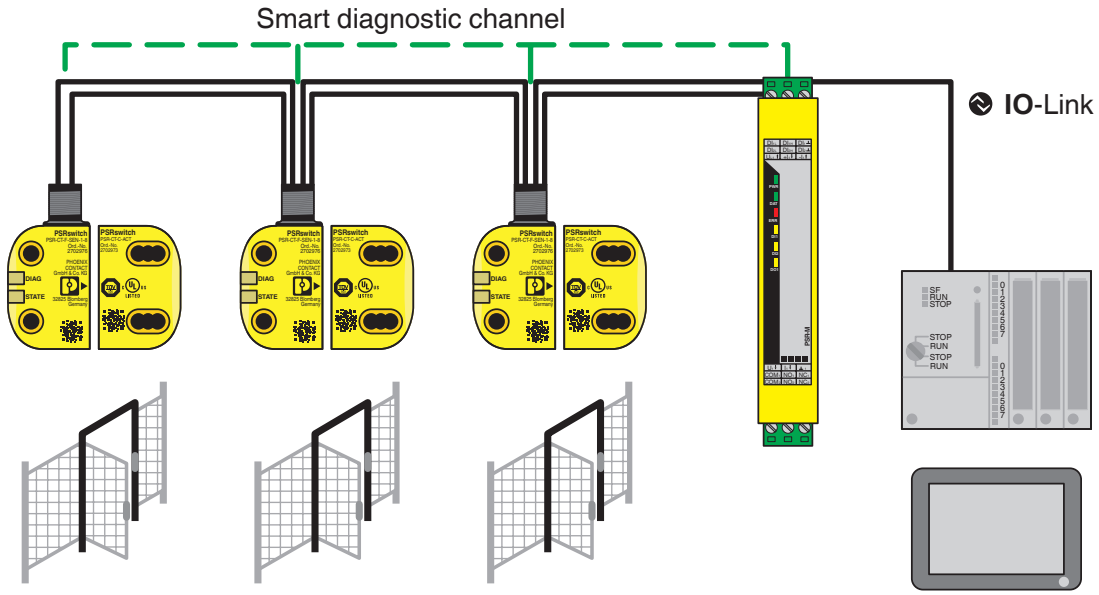

Connection diagram

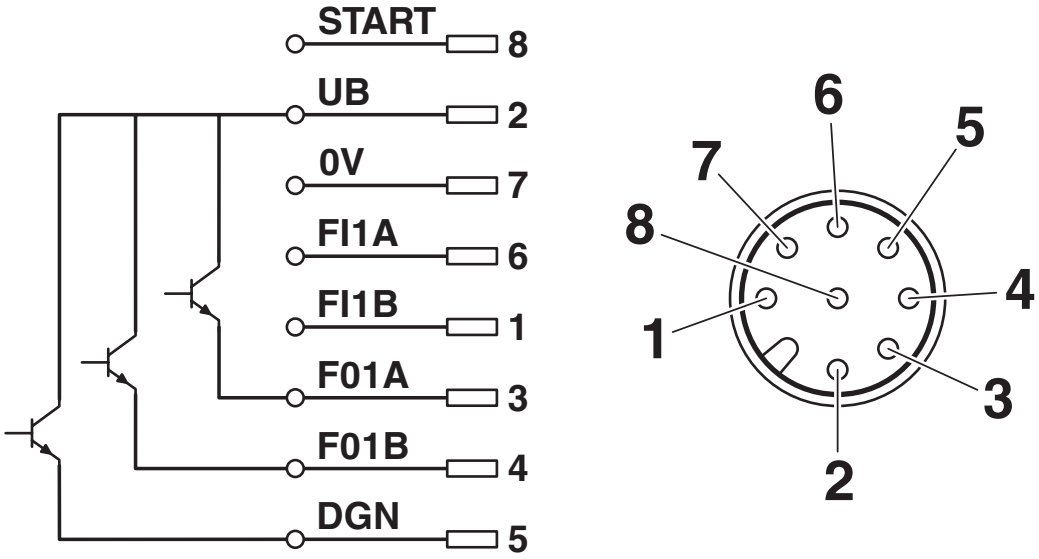

Approvals

To download certificates, visit the product detail page: https://www.phoenixcontact.com/us/products/2702975

UL Listed
Approval ID: E196162

cUL Listed
Approval ID: E196162

Functional Safety
Approval ID: Z10 029429 0033

FCC
Approval ID: YG3-PSR1

Industry Canada
Approval ID: 4720B-PSR1

Classifications

ECLASS

ECLASS-13.0	27274601
ECLASS-15.0	27274601
ECLASS-15.0 ASSET	27250101

ETIM

ETIM 10.0	EC003015

UNSPSC

UNSPSC 21.0	32151800

Environmental product compliance

EU RoHS

Fulfills EU RoHS substance requirements	Yes
Exemption	6(c), 7(a), 7(c)-I

China RoHS

Environment friendly use period (EFUP)	EFUP-50
	An article-related China RoHS declaration table can be found in the download area for the respective article under "Manufacturer declaration". For all articles with EFUP-E, no China RoHS declaration table issued and required.

EU REACH SVHC

REACH candidate substance (CAS No.)	Lead(CAS: 7439-92-1)
SCIP	fe998480-0ec0-43d2-b524-cc43d9d98f75

Phoenix Contact 2026 © - all rights reserved
https://www.phoenixcontact.com

Phoenix Contact USA
586 Fulling Mill Road
Middletown, PA 17057, United States
(+717) 944-1300
info@phoenixcon.com