IB IL MP-BUS-PAC - Communication module

2702921

https://www.phoenixcontact.com/us/products/2702921

Please be informed that the data shown in this PDF document is generated from our online catalog. Please find the complete data in the user documentation. Our general terms of use for downloads are valid.



Inline, Communication module, Master; for the connection of MP-Bus devices; transmission speed in the local bus: 500 kbps; degree of protection: IP20; Scope of supply: including Inline connector and labeling field; The product is being prepared for compliance with the Cyber Resilience Act (CRA).

Product description

Only use this terminal block in conjunction with controllers from Phoenix Contact. The terminal is designed for use within an Inline station. It enables the integration of a subordinate MP-Bus in the Inline station. Within the Inline station, the terminal acts as a master for the subordinate MP-Bus. The MP-Bus is a multi-point bus. Developed by BELIMO Automation AG (Switzerland), it replaces the traditional 0 V to 10 V interface for actuators in building automation. The MP-Bus reduces wiring costs and offers a feedback channel for sensor and status information. Bus and supply cables share a standard installation cable.

Your advantages

- MP-Bus master for the connection of up to 16 MP-Bus devices

Commercial data

Item number	2702921
Packing unit	1 pc
Minimum order quantity	1 pc
Sales key	00

Product key	DRHABA
GTIN	4055626745749
Weight per piece (including packing)	88 g
Weight per piece (excluding packing)	61 g
Customs tariff number	85389099
Country of origin	DE

Technical data

Dimensions

Dimensional drawing	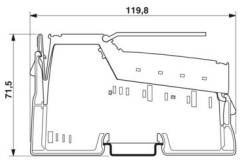
Width	12.2 mm
Height	119.8 mm
Depth	71.5 mm
Note on dimensions	Housing dimensions

Notes

Note on application	Only for industrial use
Note on application	As things stand now, we are preparing the product so that, as of December 11, 2027, it will comply with the requirements of the EU Cyber Resilience Act (CRA) based on the information currently available regarding the CRA.

Mounting

Mounting type	DIN rail mounting

Material specifications

Color (Housing)	green (RAL 6021)

Interfaces

Inline local bus

Number of interfaces	2
Connection method	Inline data jumper
Transmission speed	500 kbps

MP-Bus

Connection method	Inline connector
Note on the connection method	Signal connection: 2-wire, 3-wire with supply voltage

System properties

Programming data

Length code (hex)	08
ID code (dec.)	191
Length code (dec)	8
Process data channel	128 bit

Input address area	16 Byte
Output address area	16 Byte
Parameter channel (PCP)	0 Byte
Register length (bus)	128 bit

Product properties

Product type	I/O component
Product family	Inline
Type	modular
Installation location	Control cabinet
Scope of supply	including Inline connector and labeling field
Operating mode	Process data mode with 8 words
Special properties	The product is being prepared for compliance with the Cyber Resilience Act (CRA)
	for the connection of MP-Bus devices

Insulation characteristics

Overvoltage category	II (IEC 60664-1, EN 60664-1)
Pollution degree	2 (IEC 60664-1, EN 60664-1)

Electrical properties

Potentials: Communications power (U_L)

Supply voltage	7.5 V DC (via voltage jumper)
Current draw	max. 90 mA
	typ. 70 mA
Power consumption	max. 675 mW
	typ. 525 mW

Potentials: Main circuit supply (U_M)

Supply voltage	24 V DC (via voltage jumper)
Supply voltage range	19.2 V DC ... 30 V DC (including all tolerances, including ripple)
Current draw	max. 20 mA
	typ. 8 mA

Potentials: Segment circuit supply (U_S)

Supply voltage	24 V DC (via voltage jumper)
Supply voltage range	19.2 V DC ... 30 V DC (including all tolerances, including ripple)
Current draw	max. 8 A

Electrical isolation/isolation of the voltage ranges

Test voltage: I/O (U_M, U_S), MP-Bus/7.5 V supply (bus logic)	500 V AC, 50 Hz, 1 min
Test voltage: I/O (U_M, U_S), MP-Bus/functional ground	500 V AC, 50 Hz, 1 min
Test voltage: 7.5 V supply (bus logic)/functional ground	500 V AC, 50 Hz, 1 min

Connection data

Connection technology

Connection name	Inline connector

Inline connector

Connection method	Spring-cage connection
Conductor cross-section, rigid	0.08 mm² ... 1.5 mm²
Conductor cross-section, flexible	0.08 mm² ... 1.5 mm²
Conductor cross-section AWG	28 ... 16
Stripping length	8 mm

Environmental and real-life conditions

Ambient conditions

Ambient temperature (operation)	-25 °C ... 55 °C
Degree of protection	IP20
Air pressure (operation)	70 kPa ... 106 kPa (up to 3000 m above sea level)
Air pressure (storage/transport)	70 kPa ... 106 kPa (up to 3000 m above sea level)
Ambient temperature (storage/transport)	-25 °C ... 85 °C
Permissible humidity (operation)	10 % ... 95 % (non-condensing)
Permissible humidity (storage/transport)	10 % ... 95 % (non-condensing)

Mechanical test

Vibration resistance in accordance with EN 60068-2-6/IEC 60068-2-6	5g
Shock in accordance with EN 60068-2-27/IEC 60068-2-27	25g

Standards and regulations

Protection class	III (IEC 61140, EN 61140, VDE 0140-1)

Drawings

Dimensional drawing

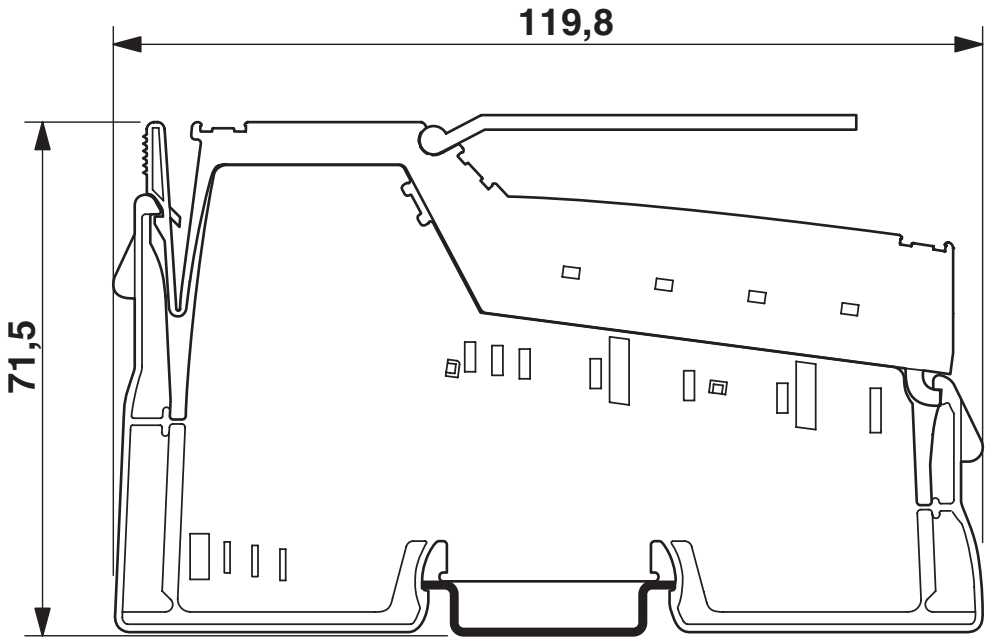

Connection diagram

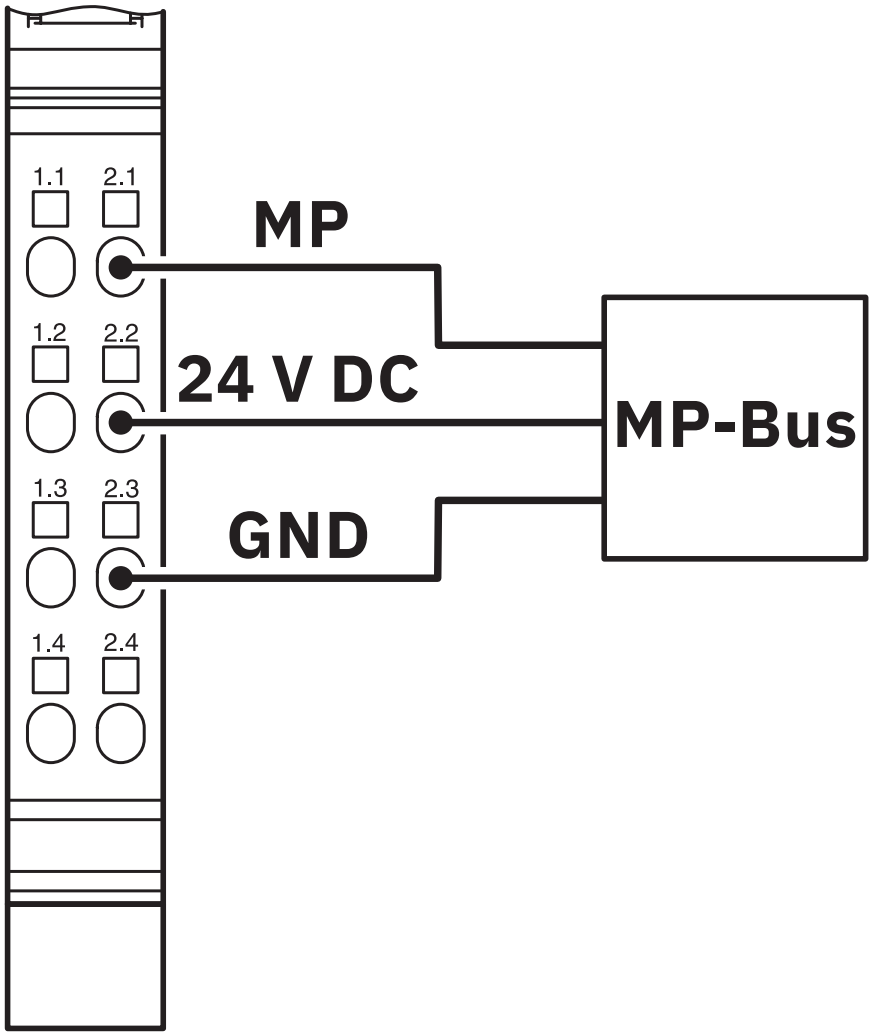

Connection of the MP-Bus

Connection diagram

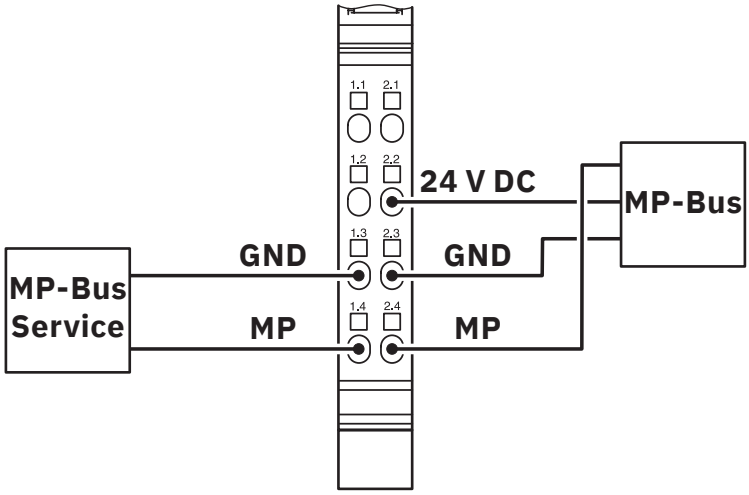

Service port

Connection diagram

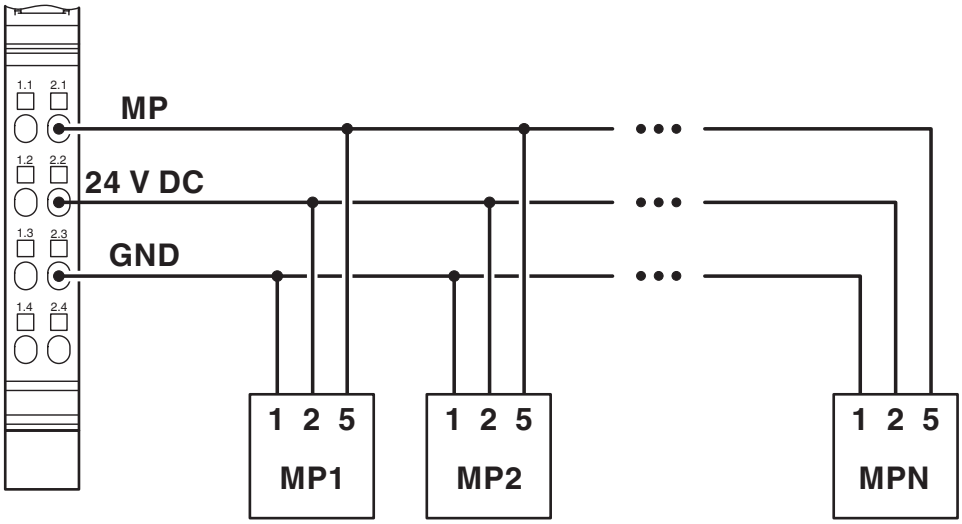

Central power supply from U_S

Connection diagram

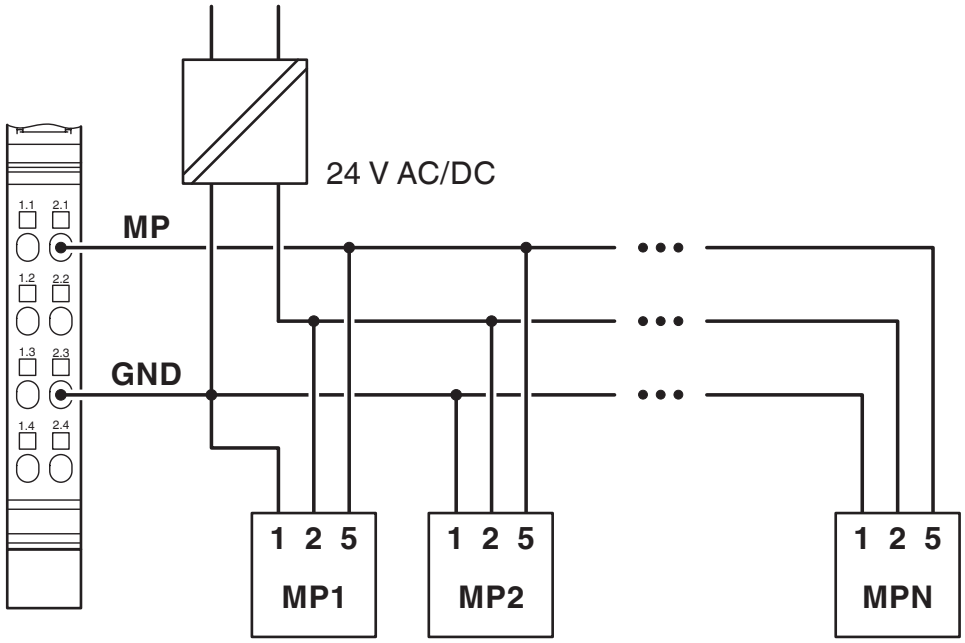

Central power supply from external 24 V supply

Connection diagram

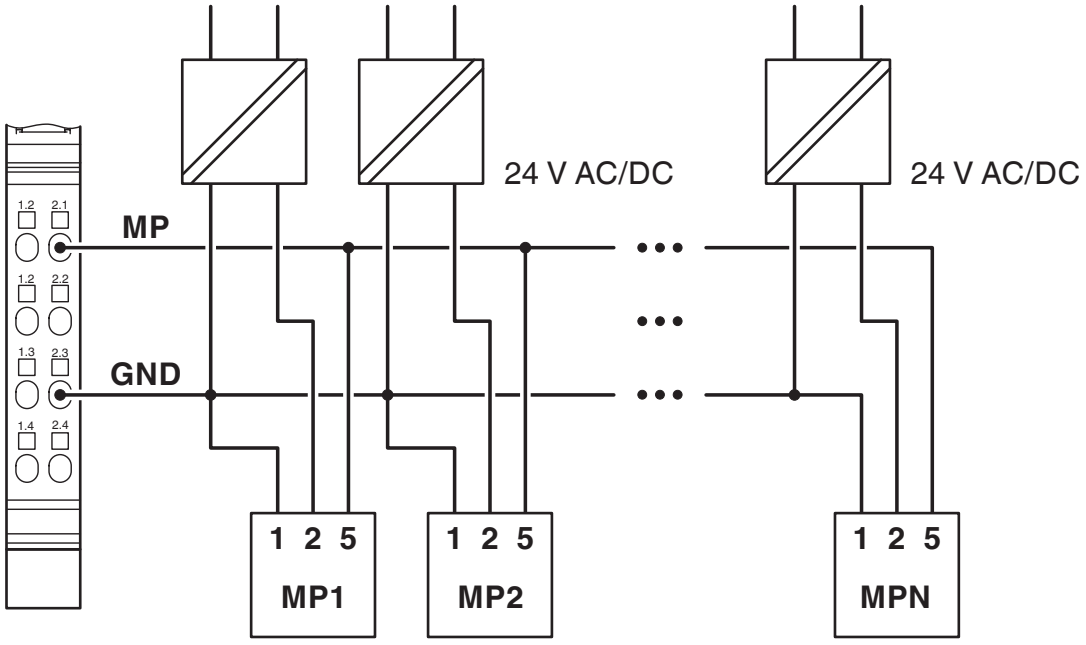

Decentralized power supply from external 24 V supplies

Connection diagram

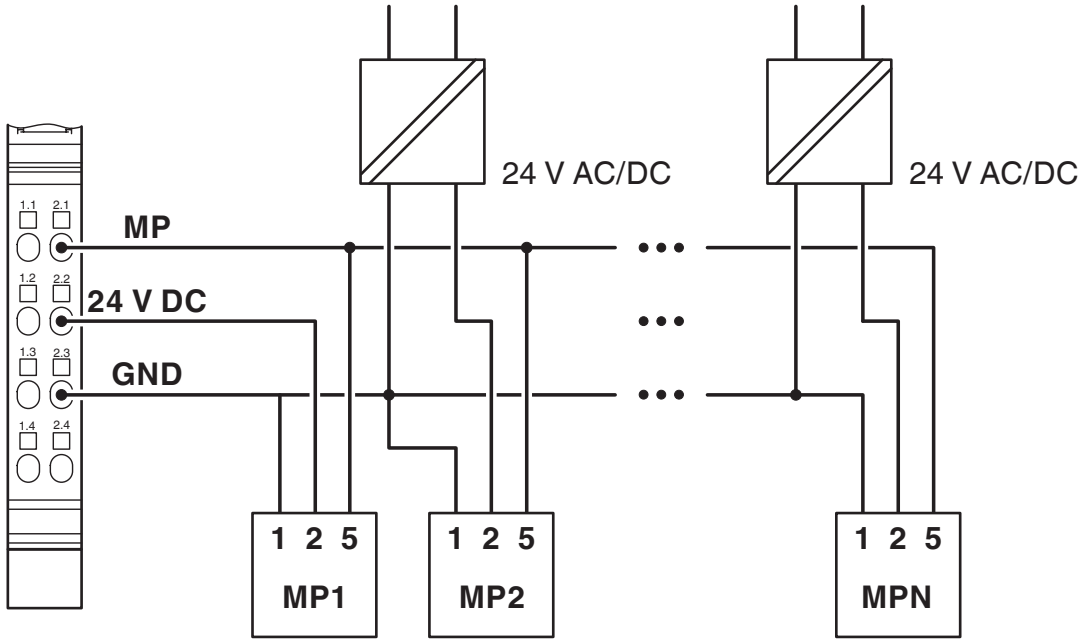

Mixed power supply

Block diagram

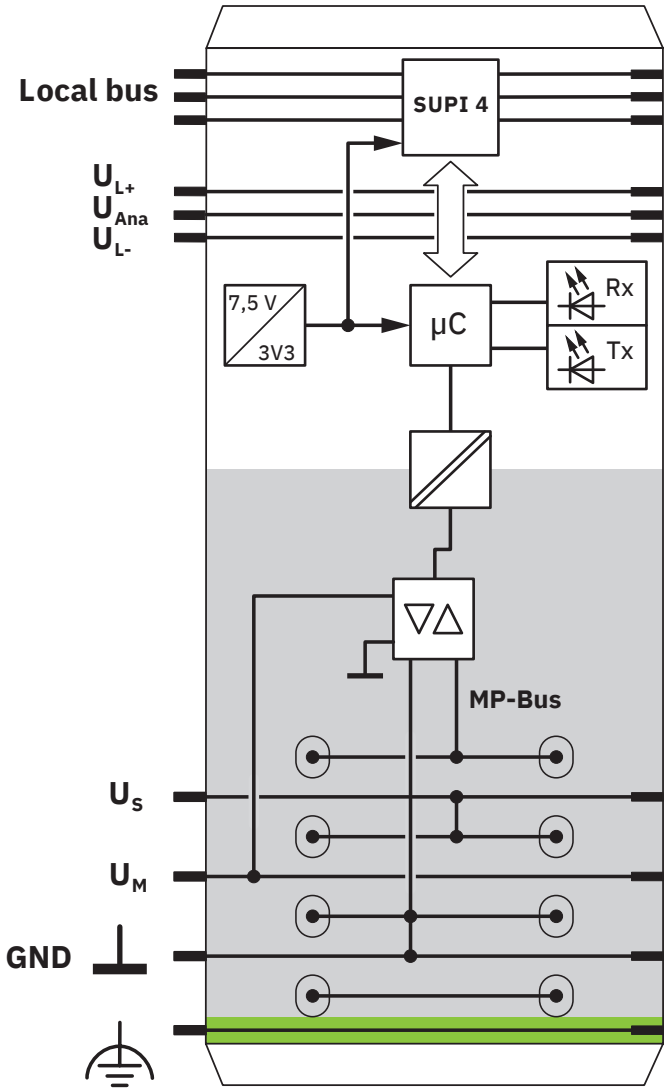

Internal wiring of the terminal points

Classifications

ECLASS

ECLASS-13.0	27242605
ECLASS-15.0	27242605

ETIM

ETIM 10.0	EC001601

UNSPSC

UNSPSC 21.0	32151600

Environmental product compliance

EU RoHS

Fulfills EU RoHS substance requirements	Yes, No exemptions

China RoHS

Environment friendly use period (EFUP)	EFUP-50
	An article-related China RoHS declaration table can be found in the download area for the respective article under "Manufacturer declaration". For all articles with EFUP-E, no China RoHS declaration table issued and required.

EU REACH SVHC

REACH candidate substance (CAS No.)	No substance above 0.1 wt%

Phoenix Contact 2026 © - all rights reserved
https://www.phoenixcontact.com

Phoenix Contact USA
586 Fulling Mill Road
Middletown, PA 17057, United States
(+717) 944-1300
info@phoenixcon.com