PSR-MC42-2NO-1DO-24DC-SP - Safety relays

2702902

https://www.phoenixcontact.com/us/products/2702902

Please be informed that the data shown in this PDF document is generated from our online catalog. Please find the complete data in the user documentation. Our general terms of use for downloads are valid.

CRA-READY



Safety relay with IO-Link for emergency stop, safety doors and light grids, up to SIL 3, Cat. 4, PL e, 2 sensor circuits, automatic or manual, monitored start, 2 enabling current paths, 1 signal output, U_S = 24 V DC, pluggable Push-in terminal block

Your advantages

- 2 enabling current paths, 1 digital signal output
- Diagnostic data via IO-Link in combination with PSR-CT safety switches
- For emergency stop and safety door monitoring, plus evaluation of light grids
- Automatic and manual activation
- 1- and 2-channel control
- 2 sensor circuits
- Up to Cat. 4/PL e in accordance with ISO 13849-1, SIL 3 in accordance with EN IEC 62061, SIL 3 in accordance with IEC 61508

IO-Link

ELEKTROGERÄTE RÜCKNAHME

Commercial data

Item number	2702902
Packing unit	1 pc
Minimum order quantity	1 pc
Sales key	DN01

Product key	DNA181
GTIN	4055626458564
Weight per piece (including packing)	175 g
Weight per piece (excluding packing)	150.98 g
Customs tariff number	85371098
Country of origin	DE

Technical data

Notes

Note on application	Only for industrial use
Note on application	As things stand now, we are preparing the product so that, as of December 11, 2027, it will comply with the requirements of the EU Cyber Resilience Act (CRA) based on the information currently available regarding the CRA.

Product properties

Product type	Safety relays
Product family	PSRmini
Application	Emergency stop
	Safety door
	Light grid
	Magnetic switch
	Transponder
Control	1 and 2 channel
Relay type	Electromechanical relay with force-guided contacts in accordance with IEC/EN 61810-3
Special properties	The product is being prepared for compliance with the Cyber Resilience Act (CRA)

Insulation characteristics

Overvoltage category	II
Degree of pollution	2

Times

Typical response time	< 220 ms (automatic start)
	< 175 ms (manual, monitored start)
Typ. starting time with U_s	< 250 ms (when controlled via A1)
Typical release time	< 20 ms (on demand via the sensor circuit)
	< 20 ms (on demand via A1)
Restart time	< 1 s (Boot time)
Recovery time	< 500 ms
Start pulse length	≥ 500 ms (manual start)

Electrical properties

Maximum power dissipation for nominal condition	6.45 W (U_S = 30 V, U_L = 30 V, I^2 = 72 A^2)
Nominal operating mode	100% operating factor
Rated insulation voltage	320 V
Rated surge voltage/insulation	See data sheet, section “Insulation coordination”.

Supply

Designation	L+/L-

Nominal voltage for I/O supply	24 V DC -20 % / +25 % (Provided via the IO-Link interface of the IO-Link master.)
Current consumption	typ. 16 mA
Protective circuit	Serial protection against polarity reversal
	Suppressor diode

Supply

Designation	A1/A2
Rated control circuit supply voltage U_S	19.2 V DC ... 30 V DC
Rated control circuit supply voltage U_S	24 V DC -20 % / +25 % (provide external protection)
Rated control supply current I_S	typ. 60 mA
Power consumption at U_S	typ. 1.44 W
Inrush current	typ. 2.5 A (Δt = 500 µs at U_s)
Filter time	1 ms (at A1 in the event of voltage dips at U_s)
Protective circuit	Serial protection against polarity reversal
	Suppressor diode

Input data

Digital: Sensor circuit S0 (S12, S22)

Description of the input	safety-related sensor inputs
Number of inputs	2
Input voltage range "0" signal	0 V DC ... 5 V DC (S12)
	For S22, see note in “Signal generator connection versions” section.
Input voltage range "1" signal	11 V DC ... 30 V DC
Input current range "0" signal	0 mA ... 2 mA (S12, S22)
Inrush current	< 5 mA (typ. with U_S at S12, Δt = 500 µs)
	< 5 mA (typ. with U_S at S22/24 V, Δt = 500 µs)
	> -5 mA (typ. with U_S at S22/0 V, Δt = 500 µs)
Filter time	max. 1.5 ms (Test pulse width of low test pulses)
	Test pulse rate = 5 x Test pulse width
	Deactivate the switch-on pulses for safety applications.
Concurrence	∞
Max. permissible overall conductor resistance	150 Ω
Protective circuit	Suppressor diode
Current consumption	< 5 mA (typ. with U_S at S12)
	< 5 mA (typ. with U_S at S22/24 V)
	> -5 mA (typ. with U_S at S22/0 V)

Digital: Sensor circuit S1 (S32, S42)

Description of the input	safety-related sensor inputs
Number of inputs	2
Input voltage range "0" signal	0 V DC ... 5 V DC
Input voltage range "1" signal	11 V DC ... 30 V DC
Input current range "0" signal	0 mA ... 2 mA

Inrush current	< 20 mA (typ. with U_S)
Filter time	max. 1.5 ms (Test pulse width of low test pulses)
	Test pulse rate = 5 x Test pulse width
	Deactivate the switch-on pulses for safety applications.
Concurrence	∞
Max. permissible overall conductor resistance	150 Ω
Protective circuit	Suppressor diode
Current consumption	< 5 mA (typ. with U_S)

Digital: Diagnostic input (DGN)

Description of the input	non-safety-related
Number of inputs	1
Input voltage range	0 V DC ... 30 V DC
Protective circuit	Suppressor diode
Current consumption	typ. 30 mA

Digital: Start circuit (S34)

Description of the input	NPN (manual start), PNP (autostart)
Number of inputs	1
Input voltage range "1" signal	19.2 V DC ... 30 V DC (manual start, autostart: 0 V)
Inrush current	< 10 mA (typ. with U_S, Δt = 100 ms)
Max. permissible overall conductor resistance	150 Ω
Protective circuit	Suppressor diode
Current consumption	< 5 mA (typ. with U_S at S34/24 V)
	> -5 mA (typ. with U_S at S34/0 V)

IO-Link

Designation	IO-Link
Transmission speed	230 kbps (COM3)
Cycle Time	5 ms
Process data update	5 ms
Amount of process data	max. 31 Byte (Input data)
	max. 16 Byte (Output data)
Description of the input	IO-Link switching and communication cable
Number of inputs	1
Connection method	Spring-cage connection
Connection technology	3-conductor
Number of ports	1
Port type	Class A

Output data

Relay: Enabling current path (13/14, 23/24)

Output description	safety-related N/O contacts
	2 NO contacts each in series, without delay, floating
Number of outputs	2 (undelayed)

Contact switching type	2 enabling current paths
Contact material	$AgSnO_2$
Switching voltage	min. 12 V AC/DC
	max. 250 V AC/DC
Switching power	min. 60 mW
Inrush current	min. 3 mA
	max. 6 A
Switching capacity	5 A (AC15, 250 V)
	4 A (DC13, 24 V)
Limiting continuous current	6 A
Sq. Total current	72 A^2 (observe derating)
Switching frequency	0.1 Hz
Mechanical service life	10x 10^6 cycles
Output fuse	6 A gL/gG
	4 A gL/gG (for low-demand applications)

Signal: M1

Output description	PNP
	non-safety-related
Number of outputs	1
Voltage	approx. 22 V DC (U_s - 2 V)
Current	max. 100 mA
Maximum inrush current	500 mA (Δt = 1 ms at U_s)
Protective circuit	Suppressor diode

Connection data

Connection technology

pluggable	yes

Conductor connection

Connection method	Push-in connection
Conductor cross-section rigid	0.2 mm² ... 1.5 mm²
Conductor cross-section flexible	0.2 mm² ... 1.5 mm²
Conductor cross-section, flexible, with ferrule, with plastic sleeve	0.25 mm² ... 1.5 mm² (only together with CRIMPFOX 6)
Conductor cross-section, flexible, with ferrule, without plastic sleeve	0.25 mm² ... 1.5 mm² (only together with CRIMPFOX 6)
Conductor cross-section AWG	24 ... 16
Stripping length	8 mm

Signaling

Status display	5 x LED (green)
Operating voltage display	1 x LED (green, yellow, red)

Dimensions

Width	17.5 mm

Height	116.6 mm
Depth	114.5 mm

Material specifications

Color (Housing)	yellow (RAL 1018)
Housing material	PA

Characteristics

Safety data

Stop category (EN 60204-1)	0

Safety data: EN ISO 13849

Performance level (PL)	e (4 A DC13; 5 A AC15; 8760 switching cycles/year)

Safety data: IEC 61508 - High demand

Safety Integrity Level (SIL)	3

Safety data: IEC 61508 - Low demand

Safety Integrity Level (SIL)	3

Safety data: EN IEC 62061

Safety Integrity Level (SIL)	3

Environmental and real-life conditions

Ambient conditions

Degree of protection	IP20
Min. degree of protection of inst. location	IP54
Ambient temperature (operation)	-25 °C ... 60 °C (observe derating)
Ambient temperature (storage/transport)	-40 °C ... 85 °C
Maximum altitude	≤ 2000 m (Above sea level)
Max. permissible humidity (storage/transport)	75 % (on average, 85% infrequently, non-condensing)
Max. permissible relative humidity (operation)	75 % (on average, 85% infrequently, non-condensing)
Shock	15g
Vibration (operation)	10 Hz ... 150 Hz, amplitude 0.15 mm, 2g

Mounting

Mounting type	DIN rail mounting
Assembly note	See derating curve
Mounting position	vertical or horizontal

Drawings

Circuit diagram

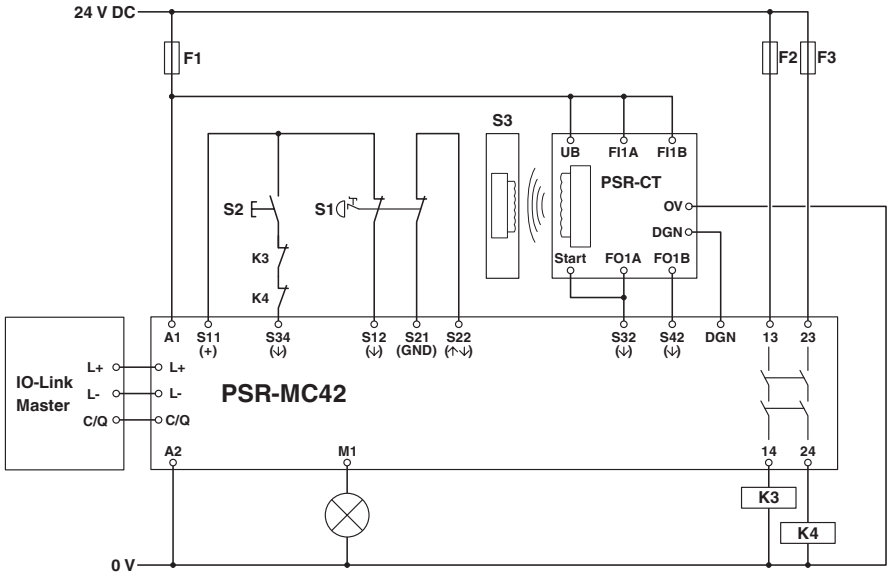

Block diagram

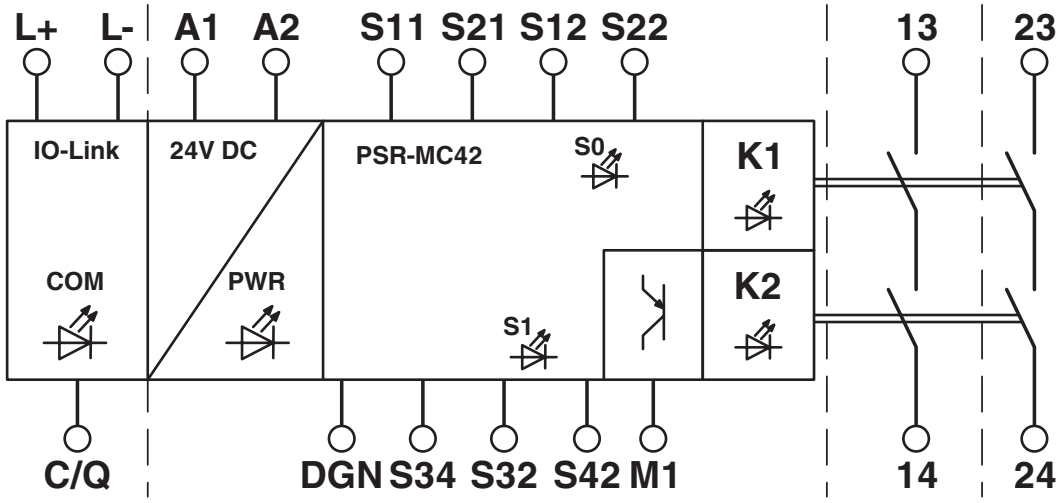

Block diagram

Approvals

To download certificates, visit the product detail page: https://www.phoenixcontact.com/us/products/2702902

cULus Listed
Approval ID: E140324

Functional Safety
Approval ID: 01/205/5677.02/24

Classifications

ECLASS

ECLASS-13.0	27371819
ECLASS-15.0	27371819
ECLASS-15.0 ASSET	27250101

ETIM

ETIM 10.0	EC001449

UNSPSC

UNSPSC 21.0	39122200

Environmental product compliance

EU RoHS

Fulfills EU RoHS substance requirements	Yes
Exemption	7(a), 7(a)-I, 7(c)-I

China RoHS

Environment friendly use period (EFUP)	EFUP-50
	An article-related China RoHS declaration table can be found in the download area for the respective article under "Manufacturer declaration". For all articles with EFUP-E, no China RoHS declaration table issued and required.

EU REACH SVHC

REACH candidate substance (CAS No.)	Lead(CAS: 7439-92-1)
SCIP	3052adab-6609-4578-ab76-f438ba9089bd

Phoenix Contact 2026 © - all rights reserved
https://www.phoenixcontact.com

Phoenix Contact USA
586 Fulling Mill Road
Middletown, PA 17057, United States
(+717) 944-1300
info@phoenixcon.com