AXL F MA DALI2 1H - Communication module

2702864

https://www.phoenixcontact.com/us/products/2702864

Please be informed that the data shown in this PDF document is generated from our online catalog. Please find the complete data in the user documentation. Our general terms of use for downloads are valid.



Axioline F, DALI master, Single master, two channels, integrated DALI power supply unit, transmission speed in the local bus: 100 Mbps, degree of protection: IP20, including bus base module and Axioline F connectors; The product is being prepared for compliance with the Cyber Resilience Act (CRA).

Product description

The module is designed for use within an Axioline F station. The 2-channel DALI master enables communication with two DALI networks including their bus power supply with up to 230 mA each.

Your advantages

- DALI master with integrated DALI bus supply
- Suitable for single master operation
- Electrical isolation of the DALI bus
- DALI bus protected against unintentional connection of mains voltage (up to 250 V AC)
- Device rating plate stored
- Certified in accordance with DALI-2 standard (single master)

Commercial data

Item number	2702864

Packing unit	1 pc
Minimum order quantity	1 pc
Sales key	DR18
Product key	DRHABA
GTIN	4055626463360
Weight per piece (including packing)	191.5 g
Weight per piece (excluding packing)	190.5 g
Customs tariff number	85176200
Country of origin	DE

Technical data

Dimensions

Dimensional drawing	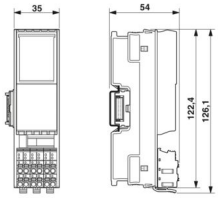
Width	35 mm
Height	126.1 mm
Depth	54 mm
Note on dimensions	The depth applies when a TH 35-7.5 DIN rail is used (in accordance with EN 60715).

Notes

Note on application	Only for industrial use
Note on application	As things stand now, we are preparing the product so that, as of December 11, 2027, it will comply with the requirements of the EU Cyber Resilience Act (CRA) based on the information currently available regarding the CRA.

Mounting

Mounting type	DIN rail mounting
Mounting position	any (no temperature derating)

Material specifications

Color (Housing)	gray (RAL 7042)

Interfaces

DALI

Number of interfaces	2
Connection method	Push-in connection

Axioline F local bus

Number of interfaces	2
Connection method	Bus base module
Transmission speed	100 Mbps

Fieldbus: DALI

Designation	DALI
Note	The data apply for DALI bus 1 and DALI bus 2, respectively.
Connection method	Push-in connection
No. of channels	2 (DALI 1, DALI 2)

Supply voltage	typ. 16 V DC (Bus voltage)
Output current	230 mA (guaranteed)
Output current with short-circuit	max. 250 mA
Current carrying capacity	max. 195 mA (Bus load, see derating)
Transmission speed	1200 bps
Type of protection	Bus protected up to 250 V AC, maximum

System properties

Programming data

Input address area	8 Byte
Output address area	8 Byte

Fieldbus data telegram

Required parameter data	1 Byte
Required configuration data	7 Byte

Product properties

Product type	I/O component
Product family	Axioline F
Type	block modular
Mounting position	any (no temperature derating)
Scope of supply	including bus base module and Axioline F connectors
Special properties	The product is being prepared for compliance with the Cyber Resilience Act (CRA)
	Single master
	two channels
	integrated DALI power supply unit

Insulation characteristics

Overvoltage category	II (IEC 60664-1, EN 60664-1)
Pollution degree	2 (IEC 60664-1, EN 60664-1)

Electrical properties

Potentials: Axioline F local bus supply (U_{Bus})

Supply voltage	5 V DC (via bus base module)
Current draw	max. 65 mA
Power consumption	max. 325 mW

Potentials: Feed-in of supply voltage (U_{I})

Supply voltage	24 V DC
Supply voltage range	19.2 V DC ... 30 V DC (including all tolerances, including ripple)
Current draw	max. 470 mA (at nominal voltage)
	typ. 250 mA
Current consumption	typ. 25 mA (without connected unit loads)
Power consumption	max. 8.8 W (both channels loaded with 195 mA)

Protective circuit	Surge protection; electronic (35 V, 0.5 s)
	Reverse polarity protection; parallel diode; with external 5 A fuse
	Transient protection; Suppressor diode
Protection	max. 8 A (polarity reversal protection up to 5 A)

Electrical isolation/isolation of the voltage ranges

Test voltage: 5 V supply of the local bus (U_{Bus}) / 24 V supply (I/Os)	500 V AC, 50 Hz, 1 min
Test voltage: 5 V supply of the local bus (U_{Bus}) / functional ground	500 V AC, 50 Hz, 1 min
Test voltage: 24 V supply (I/O) / functional ground	500 V AC, 50 Hz, 1 min
Test voltage: DALI 1 / DALI 2	500 V AC, 50 Hz, 1 min
Test voltage: DALI / 5 V supply of the local bus (U_{Bus})	1.5 kV AC, 50 Hz, 1 min
Test voltage: DALI/24 V supply (periphery)	1.5 kV AC, 50 Hz, 1 min
Test voltage: DALI/functional ground	1.5 kV AC, 50 Hz, 1 min

Connection data

Connection technology

Connection name	Axioline F connector
Note on the connection method	Please observe the information provided on conductor cross-sections in the “Axioline F: system and installation” user manual.

Axioline F connector

Connection method	Push-in connection
Note on the connection method	Please observe the information provided on conductor cross-sections in the “Axioline F: system and installation” user manual.
Conductor cross-section, rigid	0.2 mm² ... 1.5 mm²
Conductor cross-section, flexible	0.2 mm² ... 1.5 mm²
Conductor cross-section AWG	24 ... 16
Stripping length	8 mm

Environmental and real-life conditions

Ambient conditions

Ambient temperature (operation)	-25 °C ... 60 °C
Degree of protection	IP20
Air pressure (operation)	70 kPa ... 106 kPa (up to 3000 m above sea level)
Air pressure (storage/transport)	70 kPa ... 106 kPa (up to 3000 m above sea level)
Ambient temperature (storage/transport)	-40 °C ... 85 °C
Permissible humidity (operation)	5 % ... 95 % (non-condensing)
Permissible humidity (storage/transport)	5 % ... 95 % (non-condensing)

Mechanical test

Vibration resistance in accordance with EN 60068-2-6/IEC 60068-2-6	5g
Shock in accordance with EN 60068-2-27/IEC 60068-2-27	30g

Continuous shock in accordance with EN 60068-2-27/IEC 60068-2-27	10g

Standards and regulations

Protection class	III (IEC 61140, EN 61140, VDE 0140-1)

Drawings

Dimensional drawing

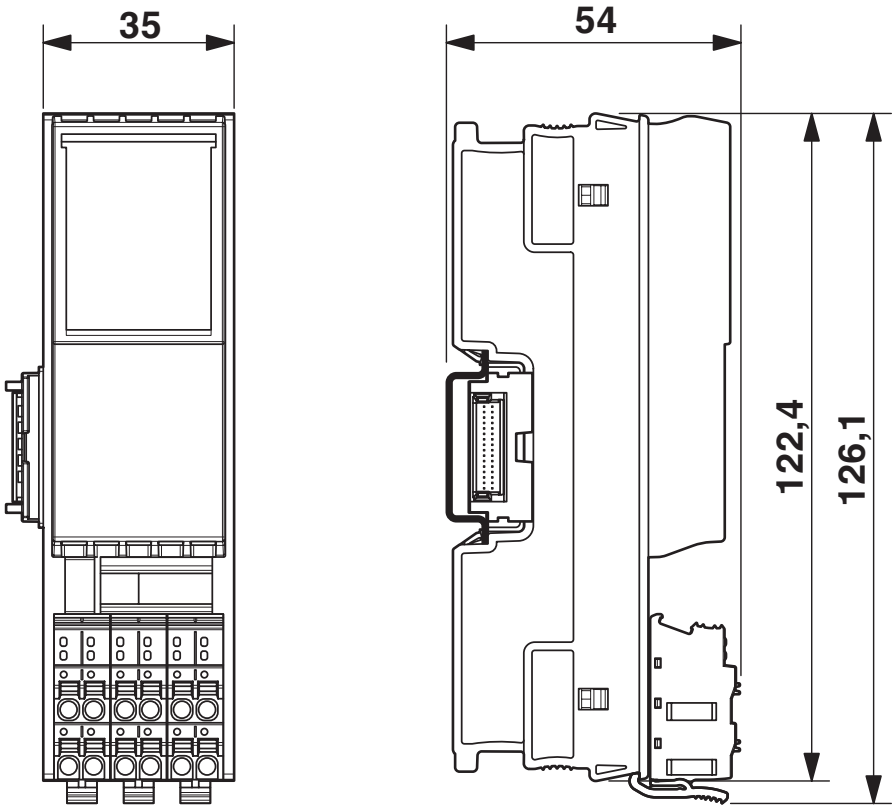

Block diagram

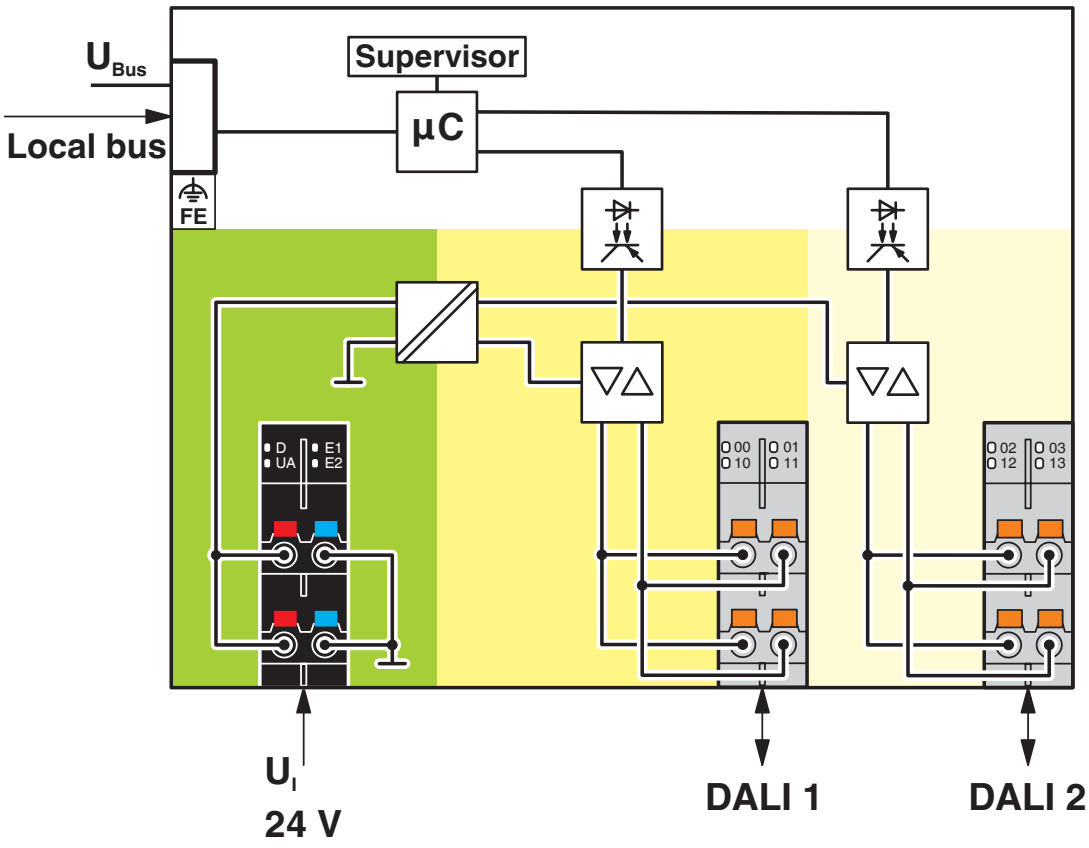

Internal wiring of the terminal points

Approvals

To download certificates, visit the product detail page: https://www.phoenixcontact.com/us/products/2702864

cULus Listed
Approval ID: E238705

Classifications

ECLASS

ECLASS-13.0	27242608
ECLASS-15.0	27242608

ETIM

ETIM 10.0	EC001604

UNSPSC

UNSPSC 21.0	32151600

Environmental product compliance

EU RoHS

Fulfills EU RoHS substance requirements	Yes
Exemption	7(a), 7(c)-I

China RoHS

Environment friendly use period (EFUP)	EFUP-50
	An article-related China RoHS declaration table can be found in the download area for the respective article under "Manufacturer declaration". For all articles with EFUP-E, no China RoHS declaration table issued and required.

EU REACH SVHC

REACH candidate substance (CAS No.)	Lead(CAS: 7439-92-1)
SCIP	42552c89-05d1-405d-8a92-cb7f1802aaf8

Phoenix Contact 2026 © - all rights reserved
https://www.phoenixcontact.com

Phoenix Contact USA
586 Fulling Mill Road
Middletown, PA 17057, United States
(+717) 944-1300
info@phoenixcon.com