AXL F PM EF 1F - Function module

2702671

https://www.phoenixcontact.com/us/products/2702671

Please be informed that the data shown in this PDF document is generated from our online catalog. Please find the complete data in the user documentation. Our general terms of use for downloads are valid.

CRA-READY



Axioline F, power measurement module, input voltage: up to 400 V AC (phase/neutral) or 690 V AC (phase/phase), input current: up to 5 A AC, transmission speed in local bus: 100 Mbps, degree of protection: IP20 , including bus base module and Axioline F connectors

Product description

The module is designed for use within an Axioline F station. The power measurement module is used for direct measurement of AC currents up to 5 A, including neutral conductor current and phase voltages up to 400 V AC (phase/neutral conductor) or phase-to-phase voltages up to 690 V AC (phase/phase). The module is used to perform analysis of AC power grids. You can use it in distribution systems for measuring current, voltage, and power, as well as detecting distortion and harmonics. You can use the power measurement module to acquire RMS values and instantaneous values. RMS values are used to acquire mains variables of three-phase mains networks. Mains variables are phase currents, neutral conductor current, phase and phase-to-phase voltages, active power, reactive power, and apparent power, power factors of the phases, energy flow directions, frequency. Instantaneous values are used to analyze the waveform of the measuring signal.

Your advantages

- 4 inputs, 0 A AC ... 5 A AC for phase currents and neutral conductor current
- 3 inputs for outer conductor voltages up to 690 V AC, supports direct connection
- Harmonics analysis
- Determination of maximum values
- Energy meter
- Process data update < 1 ms
- Also suitable for use in IT networks



Commercial data

Item number	2702671
Packing unit	1 pc
Minimum order quantity	1 pc
Sales key	DR02
Product key	DRI265
GTIN	4055626364940
Weight per piece (including packing)	287 g
Weight per piece (excluding packing)	222 g
Customs tariff number	85437090
Country of origin	DE

Technical data

Dimensions

Dimensional drawing	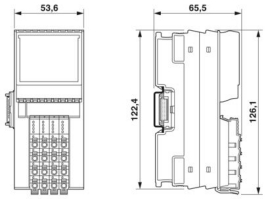
Width	53.6 mm
Height	126.1 mm
Depth	65.5 mm
Note on dimensions	The depth applies when a TH 35-7.5 DIN rail is used (in accordance with EN 60715).

Notes

Note on application

Note on application	Only for industrial use
Note on application	As things stand now, we are preparing the product so that, as of December 11, 2027, it will comply with the requirements of the EU Cyber Resilience Act (CRA) based on the information currently available regarding the CRA.

Utilization restriction

EMC note	EMC: class A product, see manufacturer's declaration in the download area

Mounting

Mounting type	DIN rail mounting
Mounting position	any (no temperature derating)

Material specifications

Color (Housing)	gray (RAL 7042)

Interfaces

Axioline F local bus

Number of interfaces	2
Connection method	Bus base module
Transmission speed	100 Mbps

System properties

Programming data

Input address area	64 Byte

Output address area	0 Byte

Fieldbus data telegram (PROFIBUS)

Required parameter data	26 Byte
Required configuration data	6 Byte

Input data

Measuring category	CAT III 300 V / CAT II 400 V in accordance with DIN EN 61010-1 and DIN EN 61010-2-030

Measurement: Current

Input name	Current measuring input
Description of the input	Detection of I1 ... I3 and IN currents, up to 5 A AC, supports direct connection
Number of inputs	4
Measuring procedure	Sigma-Delta
Measuring range	0 A AC ... 6 A AC (overrange starting at 5 A)
Nominal current I_N	5 A AC
Nominal current range	0 A AC ... 5 A AC
Load	typ. 10 mΩ
Overload	1.4 times continuous; 150 A for 10 ms
Tolerance, relative	0.25 % (of the nominal value)
Scanning rate	8k samples/s
Process data update	< 1 ms

Measurement: voltage

Input name	Voltage measuring input
Description of the input	Detection of phase voltages U1 ... U3, for phase-to-phase voltages up to 690 V AC (phase/phase), direct connection supported
Number of inputs	3
Measuring procedure	Sigma-Delta
Measuring range	0 V AC ... 440 V AC (Phase/neutral conductor)
	0 V AC ... 760 V AC (Phase/Phase)
Nominal voltage range	0 V AC ... 400 V AC (Phase/neutral conductor)
	0 V AC ... 690 V AC (Phase/Phase)
Voltage (N-G)	max. 45 V
Mains frequency	40 Hz ... 70 Hz
Input filter	3.2 kHz
Overload	1.2 times the nominal value
Tolerance, relative	0.25 % (of the nominal value)
Tolerance, relative	8k samples/s
Process data update	< 1 ms

Product properties

Product type	I/O component
Product family	Axioline F

Type	block modular
Mounting position	any (no temperature derating)
Operating mode	Process data mode with 32 words
Special properties	The product is being prepared for compliance with the Cyber Resilience Act (CRA)

Insulation characteristics

Pollution degree	2 (IEC 60664-1, EN 60664-1)

Electrical properties

Maximum power dissipation for nominal condition	2.15 W

Potentials: Axioline F local bus supply (U_{Bus})

Supply voltage	5 V DC (via bus base module)
Current draw	max. 80 mA
	typ. 73 mA

Electrical isolation/isolation of the voltage ranges

Test voltage: 5 V supply for local bus (U_{Bus}) / peripheral range AC	4 kV, 50 Hz, 1 min
Test voltage: 5 V supply of the local bus (U_{Bus}) / functional ground	500 V AC, 50 Hz, 1 min
Test voltage: Peripheral range for AC/functional ground	4 kV, 50 Hz, 1 min

Connection data

Connection technology

Connection name	Axioline F connector
Note on the connection method	Please observe the information provided on conductor cross-sections in the “Axioline F: system and installation” user manual. Only use reinforced or double-insulated conductors with a conductor cross-section of 1.5 mm².

Axioline F connector

Connection method	Push-in connection
Note on the connection method	Please observe the information provided on conductor cross-sections in the “Axioline F: system and installation” user manual. Only use reinforced or double-insulated conductors with a conductor cross-section of 1.5 mm².
Conductor cross-section, rigid	1.5 mm²
Conductor cross-section, flexible	1.5 mm²
Conductor cross-section AWG	16
Stripping length	8 mm

Environmental and real-life conditions

Ambient conditions

Ambient temperature (operation)	-25 °C ... 60 °C
Degree of protection	IP20
Air pressure (operation)	70 kPa ... 106 kPa (up to 3000 m above sea level, from HW 01)

Air pressure (storage/transport)	70 kPa ... 106 kPa (up to 3000 m above sea level)
Ambient temperature (storage/transport)	-40 °C ... 85 °C
Permissible humidity (operation)	5 % ... 95 % (non-condensing)
Permissible humidity (storage/transport)	5 % ... 95 % (non-condensing)

Mechanical test

Vibration resistance in accordance with EN 60068-2-6/IEC 60068-2-6	5g
Shock in accordance with EN 60068-2-27/IEC 60068-2-27	30g
Continuous shock in accordance with EN 60068-2-27/IEC 60068-2-27	10g

Standards and regulations

Protection class	II

Drawings

Dimensional drawing

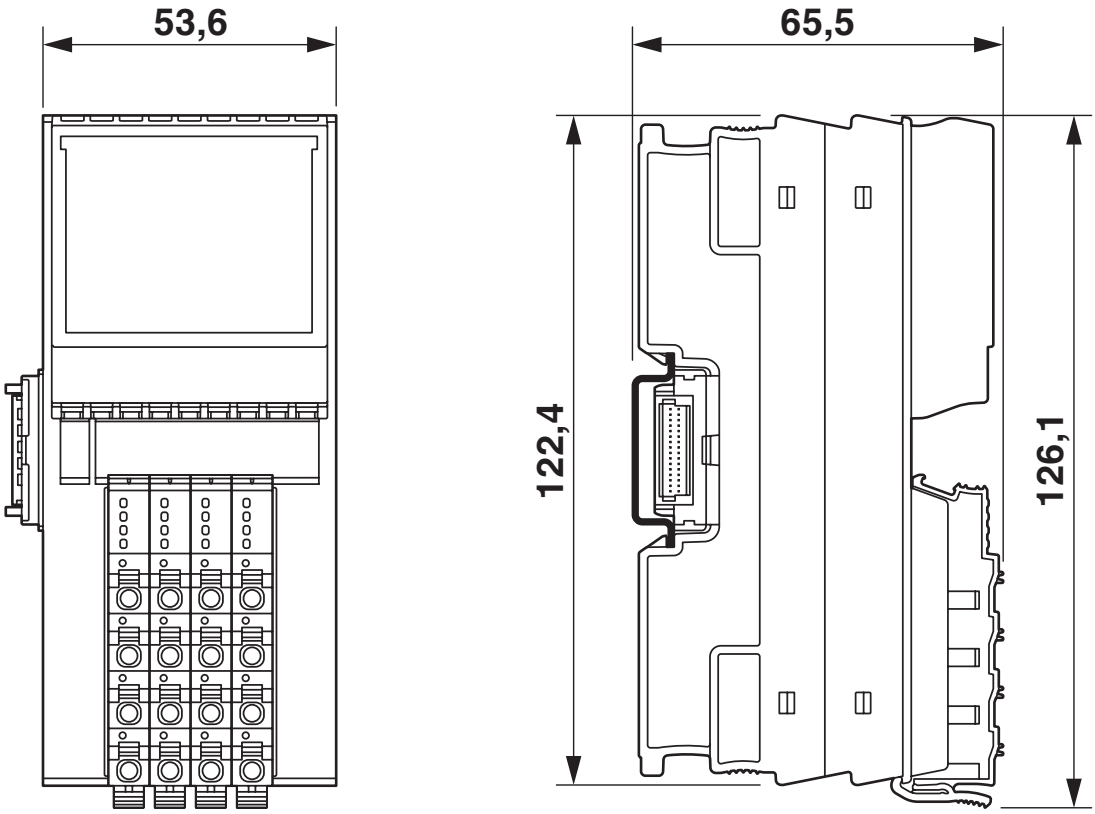

Dimensions (in mm)

Connection diagram

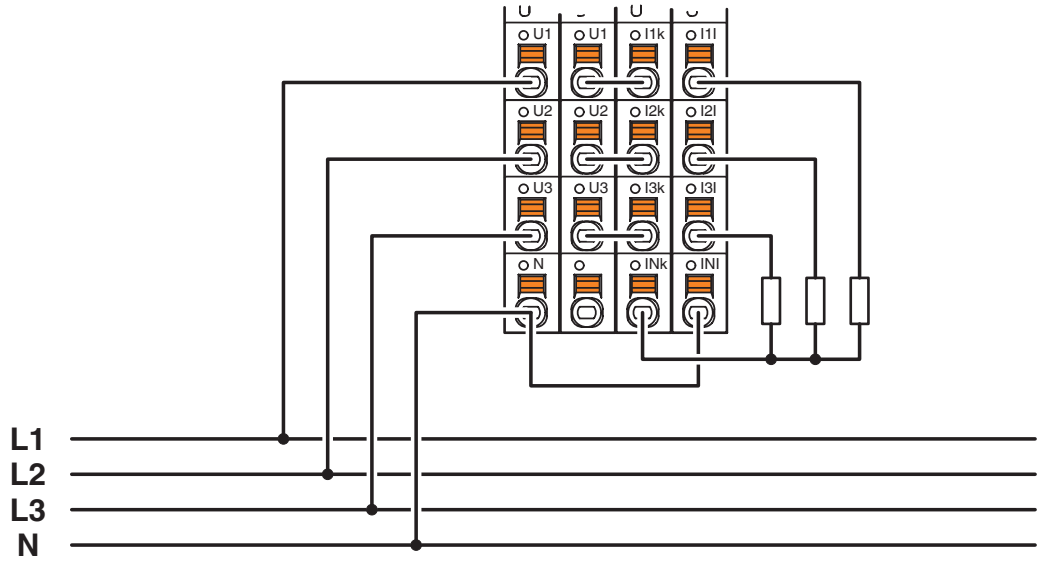

Connection of a 3-phase load for power measurement in star connection with neutral conductor current

Connection diagram

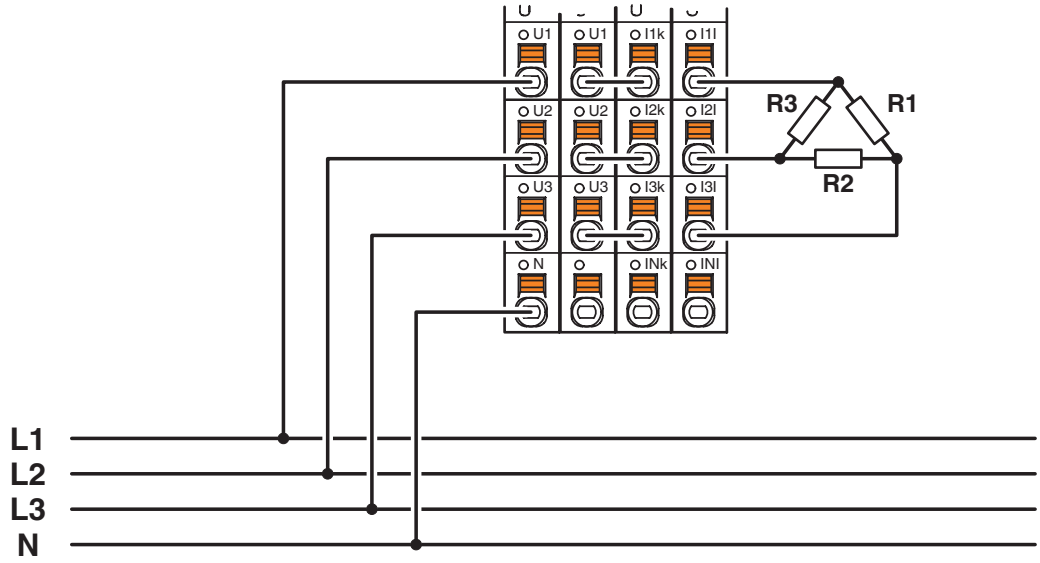

Connection of a 3-phase load for power measurement in delta circuit

Connection diagram

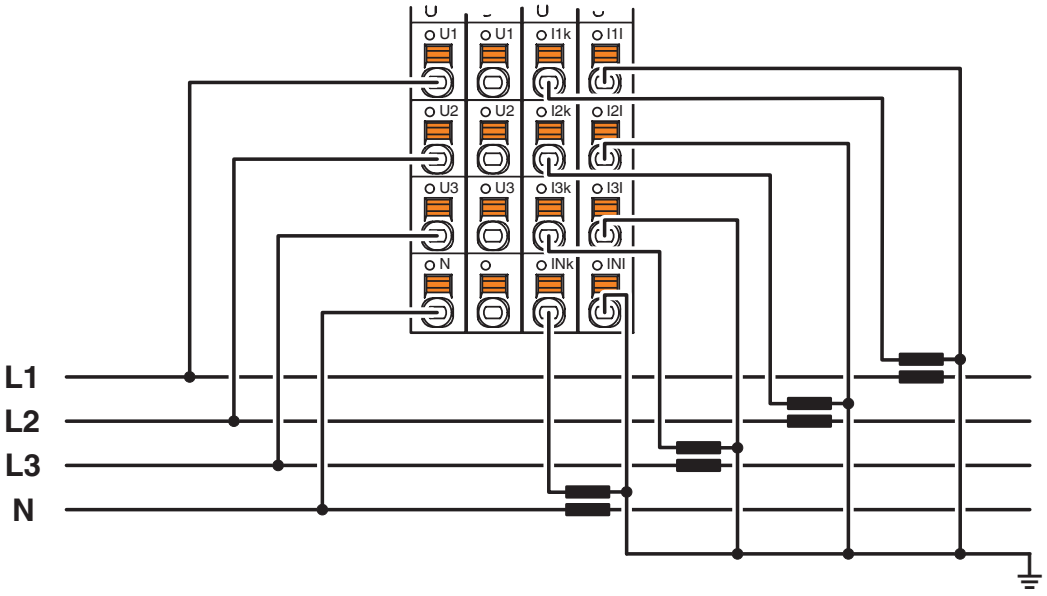

Connection of a 4-conductor grid with current transformers

Block diagram

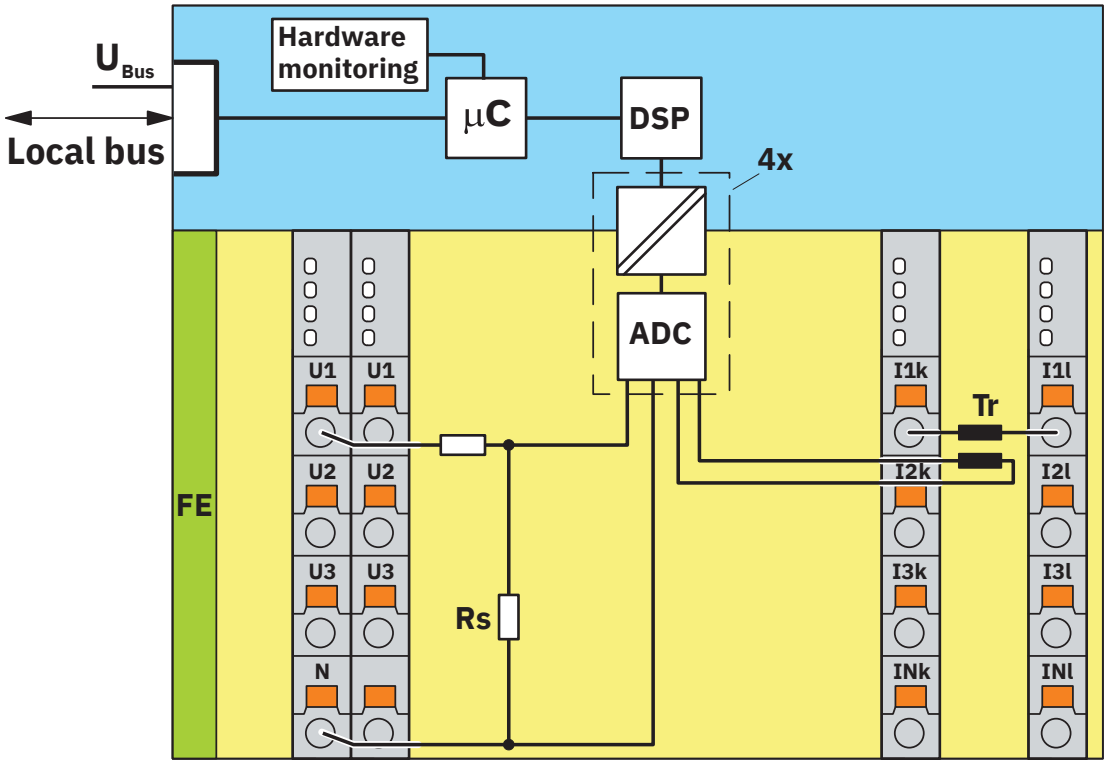

Internal wiring of the terminal points

Approvals

To download certificates, visit the product detail page: https://www.phoenixcontact.com/us/products/2702671

UL Listed
Approval ID: E357804

cUL Listed
Approval ID: E357804

Classifications

ECLASS

ECLASS-13.0	27242605
ECLASS-15.0	27242605

ETIM

ETIM 10.0	EC001601

UNSPSC

UNSPSC 21.0	32151600

Environmental product compliance

EU RoHS

Fulfills EU RoHS substance requirements	Yes
Exemption	7(c)-I

China RoHS

Environment friendly use period (EFUP)	EFUP-50
	An article-related China RoHS declaration table can be found in the download area for the respective article under "Manufacturer declaration". For all articles with EFUP-E, no China RoHS declaration table issued and required.

EU REACH SVHC

REACH candidate substance (CAS No.)	6,6'-di-tert-butyl-2,2'-methylenedi-p-cresol(CAS: 119-47-1)
SCIP	b1221b74-62e2-4a26-8087-24463c78e22a

EF3.1 Climate Change

CO2e kg	12.618 kg CO2e

Phoenix Contact 2026 © - all rights reserved
https://www.phoenixcontact.com

Phoenix Contact USA
586 Fulling Mill Road
Middletown, PA 17057, United States
(+717) 944-1300
info@phoenixcon.com