FL SWITCH 2105 - Industrial Ethernet Switch

2702665

https://www.phoenixcontact.com/us/products/2702665

Please be informed that the data shown in this PDF document is generated from our online catalog. Please find the complete data in the user documentation. Our general terms of use for downloads are valid.

CRA-READY



The figure shows a version of the product

Managed Switch 2000 series, 5 RJ45 ports 10/100/1000 Mbps, degree of protection: IP20, Ambient temperature (operation): 0 °C ... 60 °C, Supply voltage range: 18 V DC ... 32 V DC, PROFINET Conformance Class A, Development process certified in accordance with IEC 62443-4-1, Product certified in accordance with IEC 62443-4-2, The product is being prepared for compliance with the Cyber Resilience Act (CRA)

Your advantages

- VLANs
- RSTP
- DHCP client, DHCP server (port-based)
- MRP client
- Unmanaged Mode
- Configuration memory
- Web-based management, SNMP
- Easy and fast startup and commissioning with the FL NETWORK MANAGER software
- Suitable for PROFINET and EtherNet/IP™ networks

ELEKTROGERÄTE RÜCKNAHME

Commercial data

Item number	2702665

Packing unit	1 pc
Minimum order quantity	1 pc
Sales key	DN17
Product key	DNN121
GTIN	4055626283425
Weight per piece (including packing)	325 g
Weight per piece (excluding packing)	240 g
Customs tariff number	85176200
Country of origin	DE

Technical data

Dimensions

Dimensional drawing	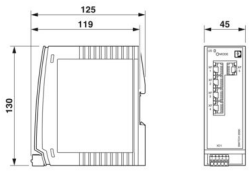
Width	45 mm
Height	130 mm
Depth	119 mm

Notes

Note on application	Support by phone or on-site (fee is charged)
Note on application	Only for industrial use
Note on application	As things stand now, we are preparing the product so that, as of December 11, 2027, it will comply with the requirements of the EU Cyber Resilience Act (CRA) based on the information currently available regarding the CRA.

Utilization restriction

EMC note	EMC: class A product, see manufacturer's declaration in the download area

Material specifications

Color (Housing)	gray (RAL 7042)
Color (Cover)	light gray (RAL 7035)
Housing material	Polycarbonate fiber reinforced

Mounting

Mounting type	DIN rail mounting

Interfaces

Ethernet (RJ45)

Connection method	RJ45
Note on the connection method	Auto negotiation and autocrossing
Transmission speed	10/100/1000 Mbps
Transmission physics	Copper
Transmission length	100 m (per segment)
Signal LEDs	Data receive, link status
No. of channels	5 (RJ45 ports)

Product properties

Product type	Switch

Product family	Managed Switch 2000
Type	Book type
MTTF	398.76 Years (SN 29500 standard, temperature 25°C, operating cycle 21%)
	174.97 Years (SN 29500 standard, temperature 40°C, operating cycle 34.25%)
	31.76 Years (SN 29500 standard, temperature 55°C, operating cycle 100%)
Special properties	Development process certified in accordance with IEC 62443-4-1
	Product certified in accordance with IEC 62443-4-2
	The product is being prepared for compliance with the Cyber Resilience Act (CRA)
Signal delay	≥ 1.9 µs (Store-and-Forward mode, 10/100/1000 Mbps, depending on the frame size)

Insulation characteristics

Protection class	III (VDE 0106)
Degree of pollution	2

Switch functions

IP parameterization	DHCP client
	DHCP server (port based)
	BootP
MAC address table	8k
PROFINET conformance class	Conformance Class A
Status and diagnostic indicators	LEDs: US (power supply), 2 LEDs per Ethernet port (Link/Activity and Speed)
Basic functions	Store-and-forward switch, complies with IEEE 802.3
Management functions	Web-based management (HTTP/HTTPS)
	Role-based user management (LDAP)
	SNMPv1/v2/v3
	Command Line Interface (Telnet, SSH)
Diagnostic functions	RMON History
	LLDP (Link Layer Discovery Protocol)
	SNMP-Traps
	N:1-Portmirroring
	ACD (Address Conflict Detection)
	SysLog
	CRC-Surveillance
Filter functions	Quality of Service (8 priority classes)
	Class of Service
	DiffServ/DSCP
	Port-Priorisierung
	VLAN (up to 8 VLANs)
	IGMP Snooping/Querier (v1/v2)
	Auto-Query-Port

	Extended Multicast Filtering
Redundancy functions	MRP (Media Redundancy Protocol)
	RSTP (Rapid Spanning Tree Protocol)
Time synchronization	SNTP (Simple Network Time Protocol)
Additional functions	Jumbo frames (max. 9,600 bytes)
	Transmission of MMS and GOOSE (IEC 61850-8-1)
	Transmission of Modbus/TCP

Electrical properties

Current consumption	225 mA
Local diagnostics	US Supply voltage Green LED
	LNK/ACT Link status Green LED
	SPD Data transmission speed Green/orange LED
Maximum power dissipation for nominal condition	6.12 W (At U_S = 18 V DC and 60°C ambient temperature)
Test section	24 V supply / functional ground 500 V DC 1 min
	Ethernet interface/all other potentials 2.25 kV DC 1 min
Transmission medium	Copper

Supply

Supply voltage (DC)	24 V DC (single)
Supply voltage range	18 V DC ... 32 V DC
Power supply connection	via COMBICON, max. conductor cross-section 1.5 mm²
Residual ripple	3.6 V_{PP} (within the permitted voltage range)
Max. current consumption	0.35 A (At U_S = 18 V DC and 60°C ambient temperature)
Typical current consumption	225 mA (at U_S = 24 V DC and 25 °C ambient temperature)
Current consumption	225 mA
Ground connection	Via DIN rail
Functional grounding	The functional ground of the module is grounded when it is snapped onto a grounded DIN rail

Connection data

Connection method	Push-in spring connection
Note on the connection method	Use only copper connecting cables providing the permitted temperature range (-40 °C ... 75 °C)
pluggable	yes
Conductor cross-section, rigid	0.25 mm² ... 1.5 mm²
Conductor cross-section, flexible	0.25 mm² ... 1.5 mm²
Conductor cross-section AWG	24 ... 16
Stripping length	9 mm

Environmental and real-life conditions

Ambient conditions

Degree of protection	IP20
Ambient temperature (operation)	0 °C ... 60 °C
Ambient temperature (storage/transport)	-40 °C ... 85 °C

Permissible humidity (operation)	10 % ... 95 % (non-condensing)
Permissible humidity (storage/transport)	10 % ... 95 % (non-condensing)
Shock (operation)	30g (EN 60068-2-27)
Vibration (operation)	2g, according to IEC 60068-2-6
Air pressure (operation)	86 kPa ... 108 kPa (1500 m above sea level)
Air pressure (storage/transport)	86 kPa ... 108 kPa (1500 m above sea level)

Standards and regulations

Free from substances that could impair the application of coating	Yes

Approvals

UL, USA/Canada

Identification	cULus
Note	UL 61010-1, Ed. 3 / UL 61010-2-201, Ed. 1, CSA C22.2 NO. 61010-2-201:14. Ed. 1 / CSA C22.2 NO.61010-1-12. Ed. 3

EMC data

Electromagnetic compatibility	Conformance with EMC Directive 2014/30/EU
Conformance with EMC directives	EN 61000-6-2 EN 61000-4-2 (ESD) Criterion B
	EN 61000-6-2 EN 61000-4-3 (electromagnetic fields) Criterion A
	EN 61000-6-2 EN 61000-4-4 (EFT burst) Criterion A
	EN 61000-6-2 EN 61000-4-5 (surge) Criterion A
	EN 61000-6-2 EN 61000-4-6 (line noise immunity) Criterion A
	EN 61000-6-2 EN 61000-6-4 (interference) Class A
	EN 61000-6-2 EN 61000-6-4 (conducted interference) Class A
Noise immunity	EN 61000-6-2

Noise emission

Standards/regulations	EN 61000-6-4

Signaling

Status display	LEDs: US (power supply), 2 LEDs per Ethernet port (Link/Activity and Speed)

Drawings

Dimensional drawing

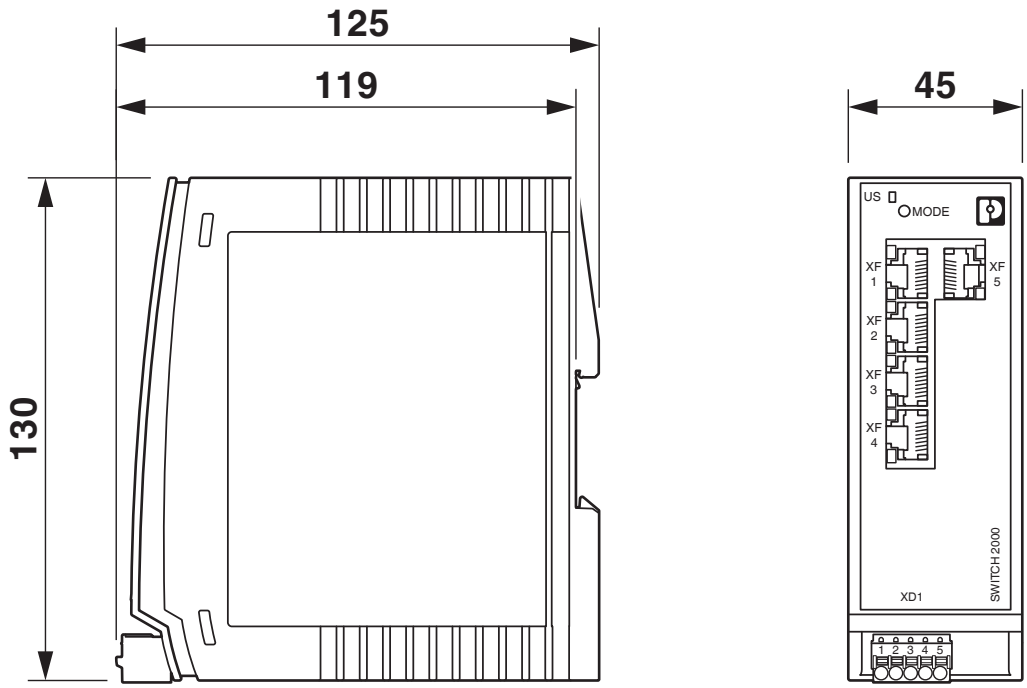

Approvals

To download certificates, visit the product detail page: https://www.phoenixcontact.com/us/products/2702665

cULus Listed
Approval ID: E238705

CC-Link IE Field
Approval ID: Ref. No. 100

Cybersecurity Certificate
Approval ID: 968 CSP 1043.00 25

Classifications

ECLASS

ECLASS-13.0	19170401
ECLASS-15.0	19170401

ETIM

ETIM 10.0	EC000734

UNSPSC

UNSPSC 21.0	43222600

Environmental product compliance

EU RoHS

Fulfills EU RoHS substance requirements	Not applicable
Exemption	7(a), 7(c)-I

China RoHS

Environment friendly use period (EFUP)	EFUP-50
	An article-related China RoHS declaration table can be found in the download area for the respective article under "Manufacturer declaration". For all articles with EFUP-E, no China RoHS declaration table issued and required.

EU REACH SVHC

REACH candidate substance (CAS No.)	Lead(CAS: 7439-92-1)
SCIP	cc2c42a1-912e-40b6-a406-c101562ff6fa

Phoenix Contact 2026 © - all rights reserved
https://www.phoenixcontact.com

Phoenix Contact USA
586 Fulling Mill Road
Middletown, PA 17057, United States
(+717) 944-1300
info@phoenixcon.com