AXL E IOL DI8 M12 6P - Digital module

2702658

https://www.phoenixcontact.com/us/products/2702658

Please be informed that the data shown in this PDF document is generated from our online catalog. Please find the complete data in the user documentation. Our general terms of use for downloads are valid.



Axioline E digital input device via IO-Link in plastic housing with one IO-Link A-port and eight inputs, 24 V DC, 4-conductor technology, M12 connectors

Product description

The Axioline E digital input device is connected to an IO-Link master via an IO-Link A port. It is used to acquire digital signals via IO-Link. Use within different networks is possible via the IO-Link master.

Your advantages

- Connection to an IO-Link master with M12 connector (A-coded, 4-pos.)
- Type A port
- IO-Link specification V1.1.2
- Connection of up to 8 inputs with M12 connectors (A-coded, 5-pos.)
- Diagnostic and status indicators
- Short-circuit and overload protection of the sensor supply
- Device rating plate stored
- IP65/IP67 degree of protection

ELEKTROGERÄTE RÜCKNAHME

Commercial data

Item number	2702658
Packing unit	1 pc
Minimum order quantity	1 pc
Sales key	DR04
Product key	DRI7DF

GTIN	4055626279671
Weight per piece (including packing)	297.7 g
Weight per piece (excluding packing)	297.7 g
Customs tariff number	85176200
Country of origin	DE

Technical data

Dimensions

Dimensional drawing	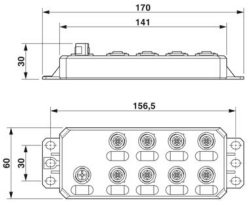
Width	60 mm
Height	141 mm
Depth	20 mm
Note on dimensions	The height is 170 mm including fixing clips. The depth is 30 mm including the connector.

Notes

Note on application

Note on application	Only for industrial use

Mounting

Mounting type	Screw mounting

Material specifications

Color (Housing)	anthracite gray (RAL 7016)
Housing material	Pocan®

Input data

Digital:

Input name	Digital inputs
Description of the input	IEC 61131-2 types 1 and 3
Number of inputs	8
Cable length	max. 30 m (to the sensor)
Connection method	M12 connector
Connection technology	4-conductor
Input voltage range "0" signal	-3 V ... 5 V DC
Input voltage range "1" signal	11 V DC ... 30 V DC
Nominal input voltage U_{IN}	24 V DC
Nominal input current at U_{IN}	typ. 2.4 mA
Input filter time	1 ms
Protective circuit	Overload protection, short-circuit protection of sensor supply
	Polarity reversal protection of the inputs

IO-Link

Number of ports	1
Connection method	M12 connector, A-coded
Connection technology	3-conductor
Port type	Class A
Specification	V1.1.2
Reverse polarity protection	yes
Transmission speed	230.4 kbps (COM3)
Cycle Time	< 1 ms
Amount of process data	16 bit (Input data)

Product properties

Product type	I/O component
Product family	Axioline E
Type	Stand-alone
Special properties	Plastic housing

Electrical properties

Supply: IO-Link

Designation	IO-Link port supply (L+)
Nominal voltage for I/O supply	24 V DC (Provided via the IO-Link interface of the IO-Link master.)
Supply voltage range	20 V DC ... 30 V DC (including all tolerances, including ripple)
Nominal current per device	approx. 40 mA (15 mA no load + current consumption sensors)
Permissible cable length	max. 20 m
Protective circuit	Reverse polarity protection; yes

Supply:

Designation	Power supply for sensors
Current consumption	max. 1.28 A (per port)
	max. 1.28 A (device dependent; observe the current of the IO-Link master that is made available via L+)

Electrical isolation/isolation of the voltage ranges

Test voltage: 24 V supply / functional ground	500 V AC, 50 Hz, 1 min

Connection data

Connection method	M12 connector
Note on the connection method	in accordance with IEC 61076-2-101, M12 connection technology

Environmental and real-life conditions

Ambient conditions

Ambient temperature (operation)	-25 °C ... 60 °C
Degree of protection	IP65/IP67
Air pressure (operation)	70 kPa ... 106 kPa (up to 3000 m above sea level)
Air pressure (storage/transport)	70 kPa ... 106 kPa (up to 3000 m above sea level)

Ambient temperature (storage/transport)	-25 °C ... 70 °C
Permissible humidity (storage/transport)	5 % ... 95 %

Mechanical test

Vibration resistance in accordance with EN 60068-2-6/IEC 60068-2-6	5g
Shock in accordance with EN 60068-2-27/IEC 60068-2-27	30g, 11 ms period, half-sine shock pulse
Continuous shock in accordance with EN 60068-2-27/IEC 60068-2-27	10g

Standards and regulations

Protection class	III (IEC 61140, EN 61140, VDE 0140-1)

Drawings

Dimensional drawing

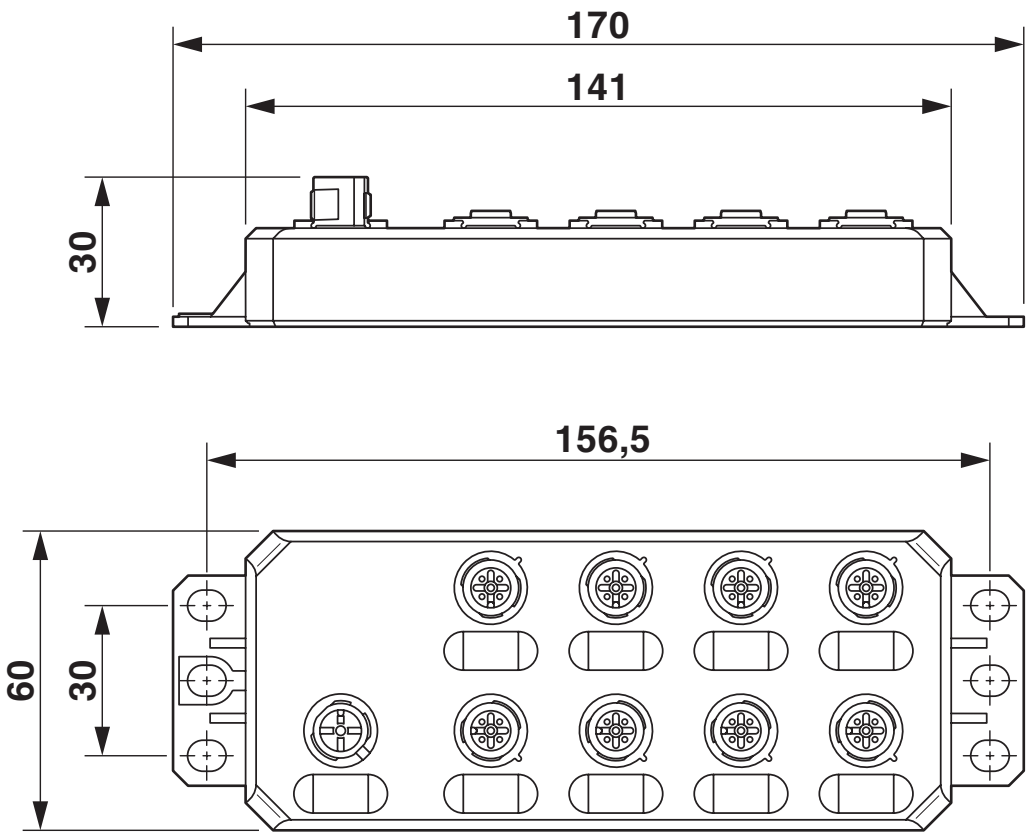

Connection diagram

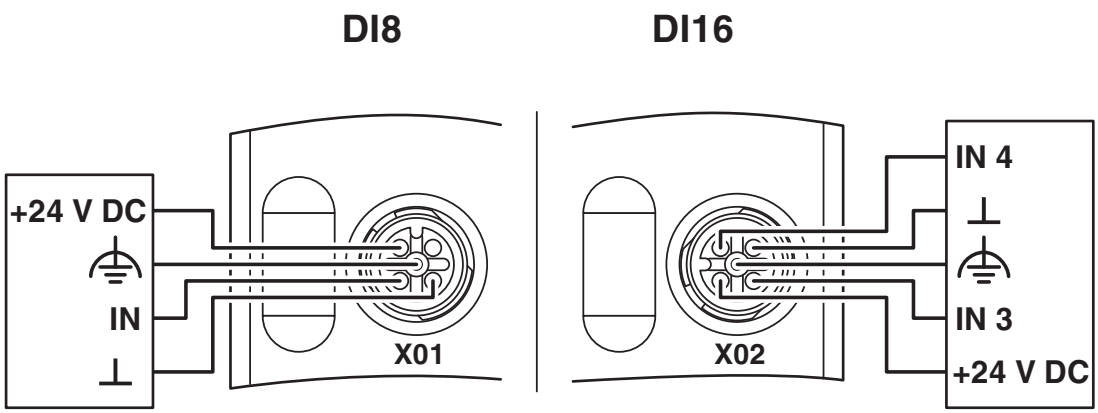

Approvals

To download certificates, visit the product detail page: https://www.phoenixcontact.com/us/products/2702658

cULus Listed
Approval ID: E238705

Classifications

ECLASS

ECLASS-13.0	27242604
ECLASS-15.0	27242604

ETIM

ETIM 10.0	EC001599

UNSPSC

UNSPSC 21.0	32151600

Environmental product compliance

EU RoHS

Fulfills EU RoHS substance requirements	Yes
Exemption	6(c), 7(a), 7(c)-I

China RoHS

Environment friendly use period (EFUP)	EFUP-50
	An article-related China RoHS declaration table can be found in the download area for the respective article under "Manufacturer declaration". For all articles with EFUP-E, no China RoHS declaration table issued and required.

EU REACH SVHC

REACH candidate substance (CAS No.)	Lead(CAS: 7439-92-1)
SCIP	1774c88d-f2d4-4bda-9c2d-3b3190a243a0

Phoenix Contact 2026 © - all rights reserved
https://www.phoenixcontact.com

Phoenix Contact USA
586 Fulling Mill Road
Middletown, PA 17057, United States
(+717) 944-1300
info@phoenixcon.com