# IL CO BK-XC-PAC - Bus coupler

2702635

https://www.phoenixcontact.com/us/products/2702635

Please be informed that the data shown in this PDF document is generated from our online catalog. Please find the complete data in the user documentation. Our general terms of use for downloads are valid.



Inline, Bus coupler, CANopen®, MINI COMBICON, Extreme conditions version, transmission speed in the local bus: 500 kbps / 2 Mbps, degree of protection: IP20, including network connector, Inline connector, and marking field

## Product description

The bus coupler is intended for use within a CANopen® network. It is the link to the Inline I/O system. Up to 63 Inline devices can be connected to the bus coupler. A corresponding EDS file is available for integrating the Inline station into the programming system. This file can be downloaded via the product at www.phoenixcontact.com/products.

## Your advantages

- Automatic detection of the baud rate in the CANopen® network
- Programmable modes for behavior in the event of an error
- Emergency messages
- Integrated termination resistor can be switched on or off via DIP switch
- Supports two SDO servers simultaneously
- Trigger modes: event, timer, remote request
- Node and life guarding
- Heartbeat
- Connection to CANopen® with 5-pos. MINI COMBICON connector
- Can be used under extreme ambient conditions
- Extended temperature range of -40 °C ... +70 °C (see “Tested successfully: use under extreme ambient conditions” in the data sheet)
- Coated PCBs

## Commercial data

| | |
|---|---|
| Item number | 2702635 |
| Packing unit | 1 pc |
| Minimum order quantity | 1 pc |
| Sales key | DR01 |
| Product key | DRI113 |
| GTIN | 4055626357546 |
| Weight per piece (including packing) | 175.5 g |
| Weight per piece (excluding packing) | 169 g |
| Customs tariff number | 85176200 |
| Country of origin | DE |

## Technical data

### Dimensions

| | |
|---|---|
| Dimensional drawing | 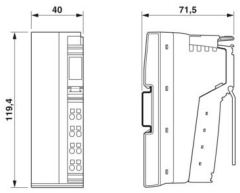  |
| Width | 40 mm |
| Height | 119.4 mm |
| Depth | 71.5 mm |
| Note on dimensions | Housing dimensions |

### Notes

Note on application

| | |
|---|---|
| Note on application | Only for industrial use |

### Mounting

| | |
|---|---|
| Mounting type | DIN rail mounting |

### Material specifications

| | |
|---|---|
| Color (Housing) | green (RAL 6021) |

### Interfaces

CANopen®

| | |
|---|---|
| Number of interfaces | 1 |
| Connection method | MINI COMBICON |
| Number of positions | 5 |
| Transmission speed | 1 Mbps, 800 kbps, 500 kbps, 250 kbps, 125 kbps, 50 kbps, 20 kbps, 10 kbps (Can be set via DIP switch or automatic detection) |

Inline local bus

| | |
|---|---|
| Number of interfaces | 1 |
| Connection method | Inline data jumper |
| Transmission speed | 500 kbps / 2 Mbps (automatic detection, no combined system) |

Fieldbus: Local bus gateway

| | |
|---|---|
| Max. number of local bus devices | 63 (Consider the logic current consumed by the devices) |

### System properties

System limits

| | |
|---|---|
| Amount of process data (Input data) | max. 256 Byte |

| | |
|---|---|
| Amount of process data (Output data) | max. 256 Byte |
| Number of supported devices | max. 63 (per station) |
| Number of local bus devices that can be connected | max. 63 |
| Number of devices with parameter channel | max. 16 |
| Number of supported branch terminals with remote bus branch | 0 |

Programming data

| | |
|---|---|
| Register length (master) | 512 Byte |

## Product properties

| | |
|---|---|
| Product type | I/O component |
| Product family | Inline |
| Type | modular |
| Scope of supply | including network connector, Inline connector, and marking field |
| Special properties | Extreme conditions version |
| Diagnostics messages | CRC error Message about the emergency object |
| | I/O error Message about the emergency object |
| | Power error Message about the emergency object |
| | Module change errors Message about the emergency object |
| | Inactive local bus Message about the emergency object |
| | Inline connection error Message about the emergency object |
| | Faulty Inline cycles Message about the emergency object |

## Electrical properties

| | |
|---|---|
| Maximum power dissipation for nominal condition | 3.6 W |

Potentials: Bus coupler supply $U_{BK}$; Communications power $U_L$ (7.5 V) and the analog supply $U_{ANA}$ (24 V) are generated from the bus coupler supply.

| | |
|---|---|
| Supply voltage | 24 V DC (via Inline connector) |
| Supply voltage range | 19.2 V DC ... 30 V DC (including all tolerances, including ripple) |
| Current draw | max. 0.9 A (with max. number of connected I/O terminal blocks) |
| | typ. 51 mA (no local bus devices connected) |

Potentials: Communications power ($U_L$)

| | |
|---|---|
| Supply voltage | 7.5 V DC |
| Power supply | max. 0.8 A |

Potentials: Supply of analog modules ($U_{ANA}$)

| | |
|---|---|
| Supply voltage | 24 V DC |
| Supply voltage range | 19.2 V DC ... 30 V DC (including all tolerances, including ripple) |
| Power supply | max. 0.5 A |

Potentials: Main circuit supply ($U_M$)

| | |
|---|---|
| Supply voltage | 24 V DC (via Inline connector) |
| Supply voltage range | 19.2 V DC ... 30 V DC (including all tolerances, including ripple) |
| Power supply | max. 8 A (sum of $U_M$ + $U_S$) |

Potentials: Segment circuit supply ($U_S$)

| | |
|---|---|
| Supply voltage | 24 V DC (via Inline connector) |
| Supply voltage range | 19.2 V DC ... 30 V DC (including all tolerances, including ripple) |
| Power supply | max. 8 A (sum of $U_M$ + $U_S$) |

## Connection data

Connection technology

| | |
|---|---|
| Connection name | Inline connector |

Inline connector

| | |
|---|---|
| Connection method | Spring-cage connection |
| Conductor cross-section, rigid | 0.08 mm² ... 1.5 mm² |
| Conductor cross-section, flexible | 0.08 mm² ... 1.5 mm² |
| Conductor cross-section AWG | 28 ... 16 |
| Stripping length | 8 mm |

## Environmental and real-life conditions

Ambient conditions

| | |
|---|---|
| Ambient temperature (operation) | -25 °C ... 55 °C (Standard) |
| | -40 °C ... 70 °C (Extended, see section “Tested successfully: use under extreme ambient conditions” in the data sheet.) |
| Degree of protection | IP20 |
| Air pressure (operation) | 70 kPa ... 106 kPa (up to 3000 m above sea level) |
| Air pressure (storage/transport) | 70 kPa ... 106 kPa (up to 3000 m above sea level) |
| Ambient temperature (storage/transport) | -40 °C ... 85 °C |
| Permissible humidity (operation) | 10 % ... 95 % (non-condensing) |
| Permissible humidity (storage/transport) | 10 % ... 95 % (non-condensing) |

## Standards and regulations

| | |
|---|---|
| Protection class | III (IEC 61140, EN 61140, VDE 0140-1) |

## Drawings

Dimensional drawing

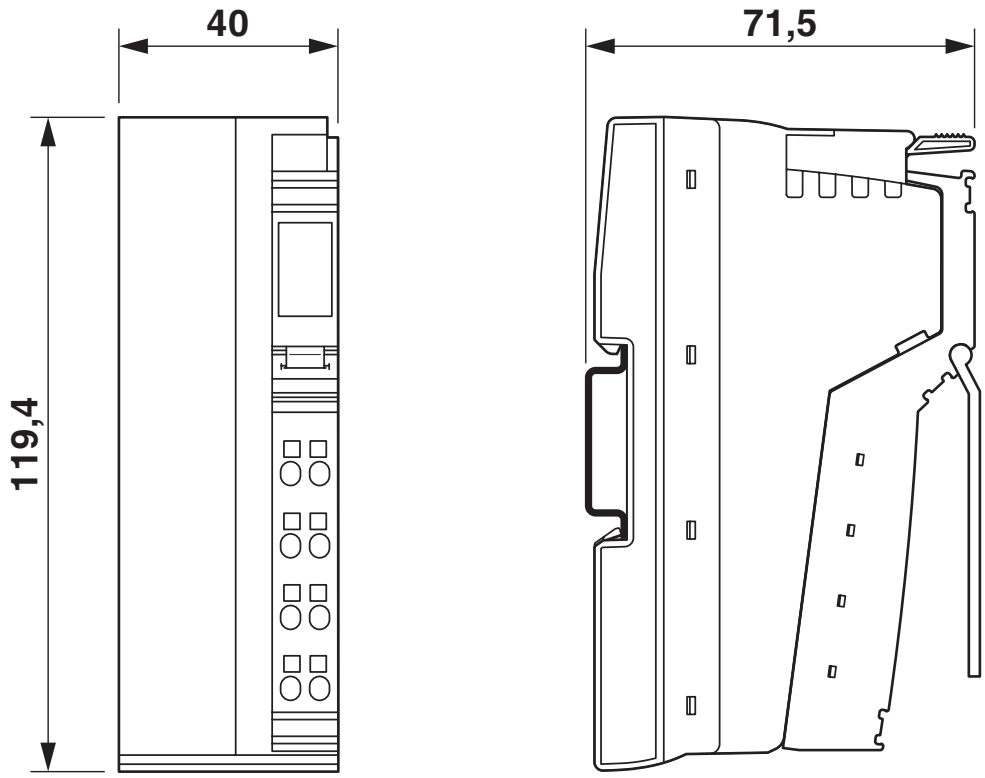

Block diagram

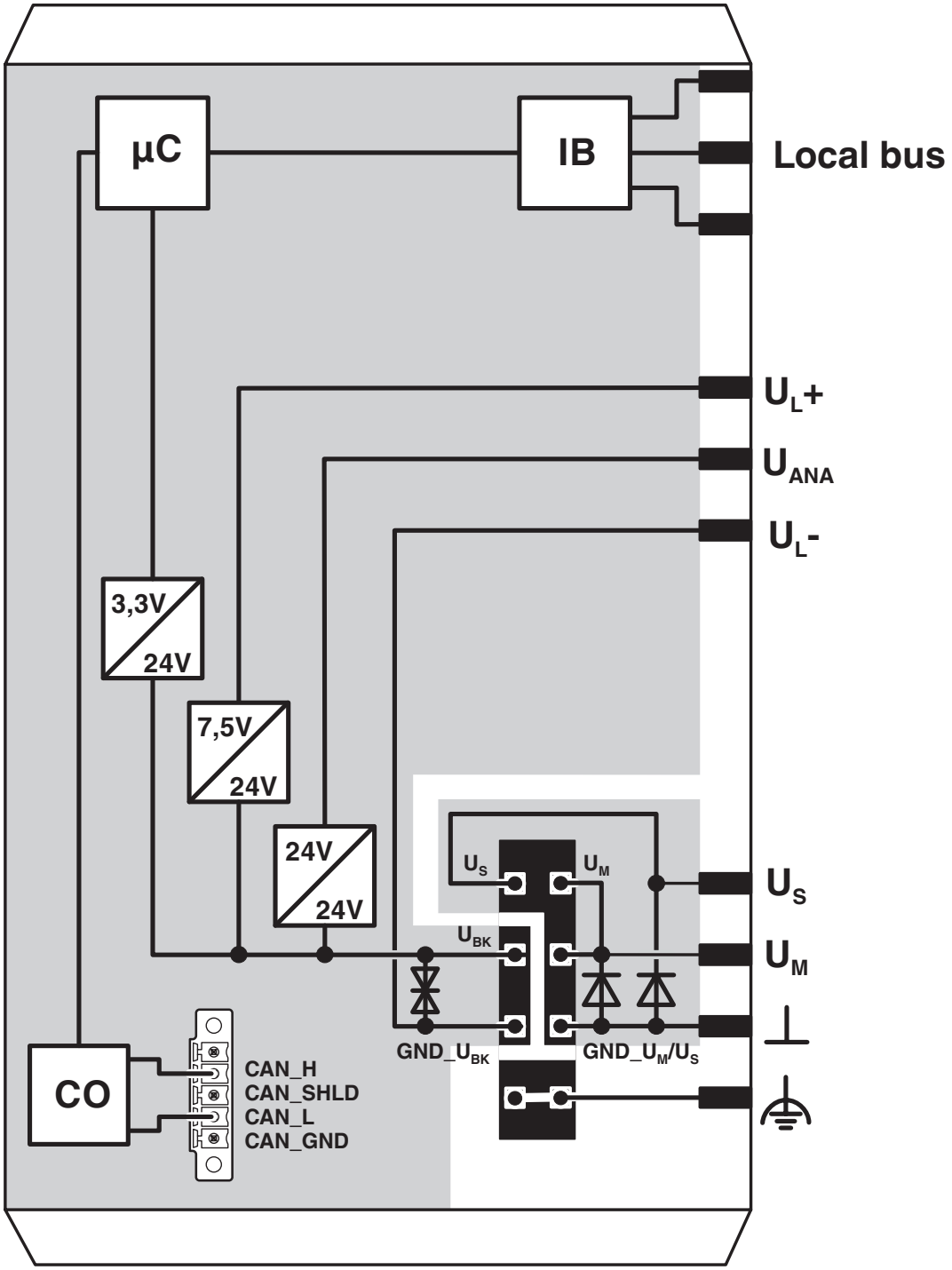

## Classifications

### ECLASS

| | |
|---|---|
| ECLASS-13.0 | 27242608 |
| ECLASS-15.0 | 27242608 |

### ETIM

| | |
|---|---|
| ETIM 10.0 | EC001604 |

### UNSPSC

| | |
|---|---|
| UNSPSC 21.0 | 32151600 |

## Environmental product compliance

EU RoHS

| | |
|---|---|
| Fulfills EU RoHS substance requirements | Yes |
| Exemption | 7(a), 7(c)-I |

China RoHS

| | |
|---|---|
| Environment friendly use period (EFUP) | EFUP-50 |
| | An article-related China RoHS declaration table can be found in the download area for the respective article under "Manufacturer declaration". For all articles with EFUP-E, no China RoHS declaration table issued and required. |

EU REACH SVHC

| | |
|---|---|
| REACH candidate substance (CAS No.) | Lead(CAS: 7439-92-1) |
| SCIP | 08167139-aec0-4477-9a00-41165f285821 |

Phoenix Contact 2026 © - all rights reserved
https://www.phoenixcontact.com

Phoenix Contact USA
586 Fulling Mill Road
Middletown, PA 17057, United States
(+717) 944-1300
info@phoenixcon.com