TC ROUTER 3002T-4G VZW - Router

2702532

https://www.phoenixcontact.com/us/products/2702532

Please be informed that the data shown in this PDF document is generated from our online catalog. Please find the complete data in the user documentation. Our general terms of use for downloads are valid.



Industrial LTE 4G router, version for Verizon wireless (US), 2 Ethernet interfaces, firewall, NAT, IPsec and OpenVPN support, 2x SMA-F antenna socket, SMS and e-mail transmission, 2 digital inputs, 1 digital output

Product description

The TC ROUTER for cellular communication implements high-performance data links of up to 150 Mbps via mobile 4G LTE networks. This enables you to establish a mobile broadband connection for highly flexible site networking even in places where a wired Internet connection is not available. These connections can be used to transmit sensitive data securely over mobile networks. Furthermore, the TC ROUTER offers a high level of security thanks to IPsec or OpenVPN tunnels, as well as an integrated stateful packet inspection firewall. This means that you can reliably protect your application against unauthorized access.

Your advantages

- Industrial 4G cellular router (LTE)
- Cellular high-speed Internet connection up to 150 Mbps
- Networking of Ethernet end devices via the cellular network
- Ethernet SMS gateway for easy alerting
- Stateful inspection firewall for dynamic filtering
- NAT table and port forwarding for direct remote access to an end device
- Two switching inputs and one switching output
- Configuration via web-based management or microSD card
- Two local Ethernet connections
- Switchable energy-saving mode
- Integrated logbook
- Connection monitoring
- Extended temperature range of -40 °C … +70 °C

Commercial data

Item number	2702532
Packing unit	1 pc
Minimum order quantity	1 pc
Sales key	DN25
Product key	DNC422
GTIN	4055626212852
Weight per piece (including packing)	266 g
Weight per piece (excluding packing)	266 g

Customs tariff number	85176200
Country of origin	DE

Technical data

Notes

Note on application

Note on application	Only for industrial use

Utilization restriction

CCCex note	Use in potentially explosive areas is not permitted in China.

Product properties

Product type	Cellular router
Application	Ethernet
MTTF	383 Years (SN 29500 standard, temperature 25°C, operating cycle 21%)
	184 Years (SN 29500 standard, temperature 40°C, operating cycle 34.25%)
	78 Years (SN 29500 standard, temperature 40°C, operating cycle 100%)

Insulation characteristics

Pollution degree	2

Security functions

1:1 Network Address Translation (NAT) in the VPN	supported
Number of VPN tunnels	≤ 10 (IPsec or OpenVPN)
Authentication	X.509v3, PSK
Data integrity	MD5
	SHA-1
Filtering	IP addresses
	Ports
	Protocols
Firewall rules	Stateful inspection firewall
Internet Protocol Security (IPsec) mode	ESP tunnel
Encryption methods	3DES, AES-128, -192, -256

Electrical properties

Electrical isolation	VCC // LTE // Ethernet // PE
Maximum power dissipation for nominal condition	4.8 W
Mains type	Cellular communication

Supply

Supply voltage range	10 V DC ... 30 V DC (SELV, via pluggable Push-in terminal block)
Typical current consumption	< 200 mA (24 V DC)
	65 mA (With activated energy-saving mode)
Max. current consumption	1.7 A

Function

Management	Web-based management, SNMP

Input data

Digital

Description of the input	Digital input
Number of inputs	2
Voltage input signal	10 V DC ... 30 V DC
Switching level "1" signal	10 V DC ... 30 V DC

Output data

Signal

Output name	Digital output
Number of outputs	1
Voltage output signal	10 V DC ... 30 V DC (depending on the operating voltage)
Current output signal	≤ 50 mA (Not short-circuit proof)

Connection data

Supply

Connection method	Push-in spring connection
Conductor cross-section, flexible, with ferrule, without plastic sleeve	0.25 mm² ... 1.5 mm²
Conductor cross-section, flexible, with ferrule, with plastic sleeve	0.25 mm² ... 0.75 mm²
Single conductor/terminal point, rigid	0.14 mm² ... 1.5 mm²
Single-wire/terminal point, flexible	0.14 mm² ... 1.5 mm²
Conductor cross-section AWG	26 ... 16
Stripping length	9.00 mm

Interfaces

Web server	yes

Data: Ethernet interface, 10/100Base-T(X) in accordance with IEEE 802.3

Serial transmission speed	10/100 Mbps, auto negotiation
Connection method	RJ45 jack, shielded
No. of channels	2 (SELV)
Transmission length	100 m (shielded twisted pair)
Protocols supported	TCP/IP, UDP/IP, FTP, HTTP(S)
Auxiliary protocols	ARP, DHCP, PING (ICMP), SNMP V1/V2, SMTP(S), NTP, SSL/TLS, STARTTLS

Wireless

Interface description	LTE (FDD)
Frequency range	700 MHz (LTE B13)
	1700 MHz (LTE B4)

Data rate	≤ 150 Mbps (LTE, DL)
	≤ 50 Mbps (LTE, UL)
Antenna	50 Ω impedance SMA antenna socket
Antenna connection method	SMA (female)
SIM Interface	1.8 volt, 3 volt
LTE	CAT4
Country support	USA

Dimensions

Dimensional drawing	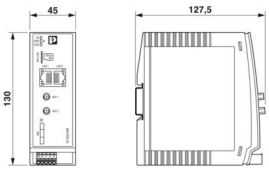
Width	45 mm
Height	130 mm
Depth	126 mm

Material specifications

Color (Upper housing part)	light gray (RAL 7035)
Material (Housing)	Plastic

Mechanical tests

Vibration resistance in accordance with EN 60068-2-6/IEC 60068-2-6	Vibration (operation): 5g, 10...150 Hz, 2.5 h, in XYZ direction
Shock in accordance with EN 60068-2-27/IEC 60068-2-27	Shock (operation): 15g

Environmental and real-life conditions

Ambient conditions

Degree of protection	IP20 (Manufacturer's declaration)
Ambient temperature (operation)	-40 °C ... 70 °C (Maximum transmission power 5 dBm)
	-40 °C ... 60 °C (Maximum transmission power 23 dBm)
Ambient temperature (storage/transport)	-40 °C ... 85 °C
Altitude	≤ 5000 m (For restrictions, see the manufacturer's declaration for altitude operation)
Permissible humidity (operation)	10 % ... 95 % (non-condensing)
Permissible humidity (storage/transport)	10 % ... 95 % (non-condensing)

Approvals

UL, USA/Canada

Identification	Class I, Zone 2, AEx nA IIC T4 / Ex nA IIC T4 Gc
	Class I, Div. 2, Groups A, B, C, D T4

Corrosive gas test

Identification	ISA-S71.04-1985 G3 Harsh Group A

Wireless approval USA, FCC

Certificate	N7NHL7518

EMC data

Electromagnetic compatibility	Conformance with RED Directive 2014/53/EU
Noise immunity	EN 61000-6-2

Electrostatic discharge

Standards/regulations	EN 61000-4-2

Electrostatic discharge

Contact discharge	± 6 kV (Test Level 3)
Discharge in air	± 8 kV (Test Level 3)
Comments	Criterion B

Electromagnetic HF field

Standards/regulations	EN 61000-4-3

Electromagnetic HF field

Frequency range	80 MHz ... 3 GHz (Test Level 3)
Field intensity	10 V/m
Comments	Criterion A

Fast transients (burst)

Standards/regulations	EN 61000-4-4

Fast transients (burst)

Input	± 2 kV (Test Level 3)
Signal	± 2 kV (Ethernet)
Comments	Criterion B

Surge current load (surge)

Standards/regulations	EN 61000-4-5

Surge current load (surge)

Input	± 0.5 kV (symmetrical)
	± 1 kV (asymmetrical)
Signal	± 1 kV (Data line, asymmetrical)
Comments	Criterion B

Conducted interference

Standards/regulations	EN 61000-4-6

Conducted interference

Frequency range	0.15 MHz ... 80 MHz
Comments	Criterion A
Voltage	10 V

Emitted interference

Radio interference voltage in acc. with EN 55011	Class B, area of application: Industry and residential
Emitted radio interference in acc. with EN 55011	Class B, area of application: Industry and residential

Criteria

Criterion A	Normal operating behavior within the specified limits.
Criterion B	Temporary impairment to operational behavior that is corrected by the device itself.

Mounting

Mounting type	DIN rail mounting

Drawings

Dimensional drawing

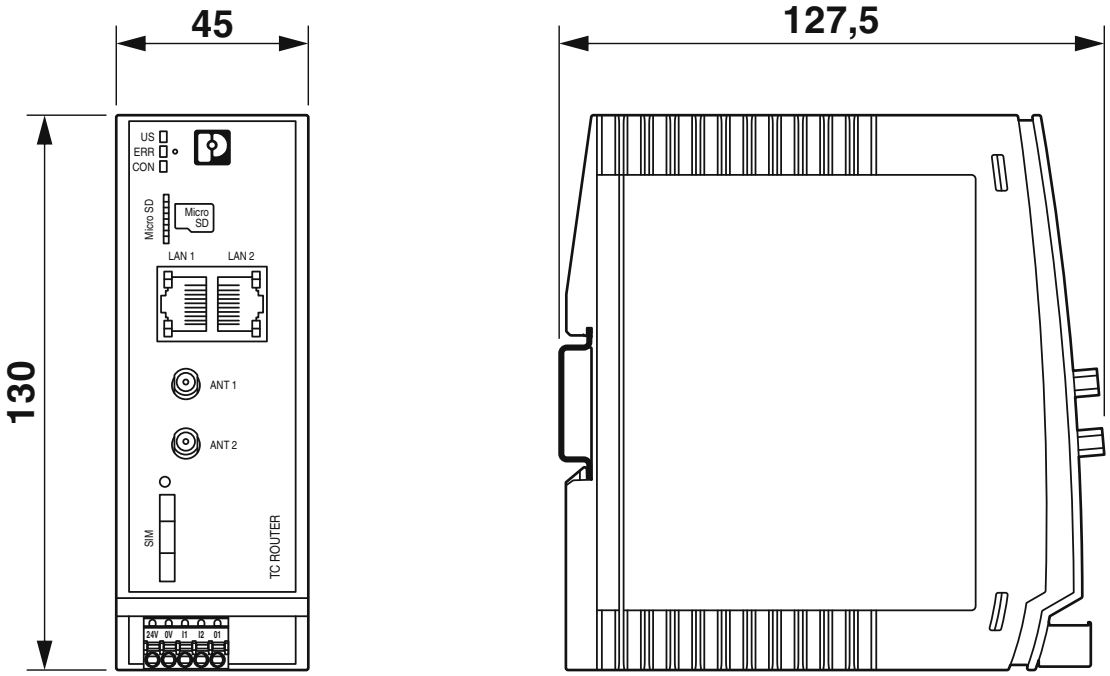

Housing dimensions

Connection diagram

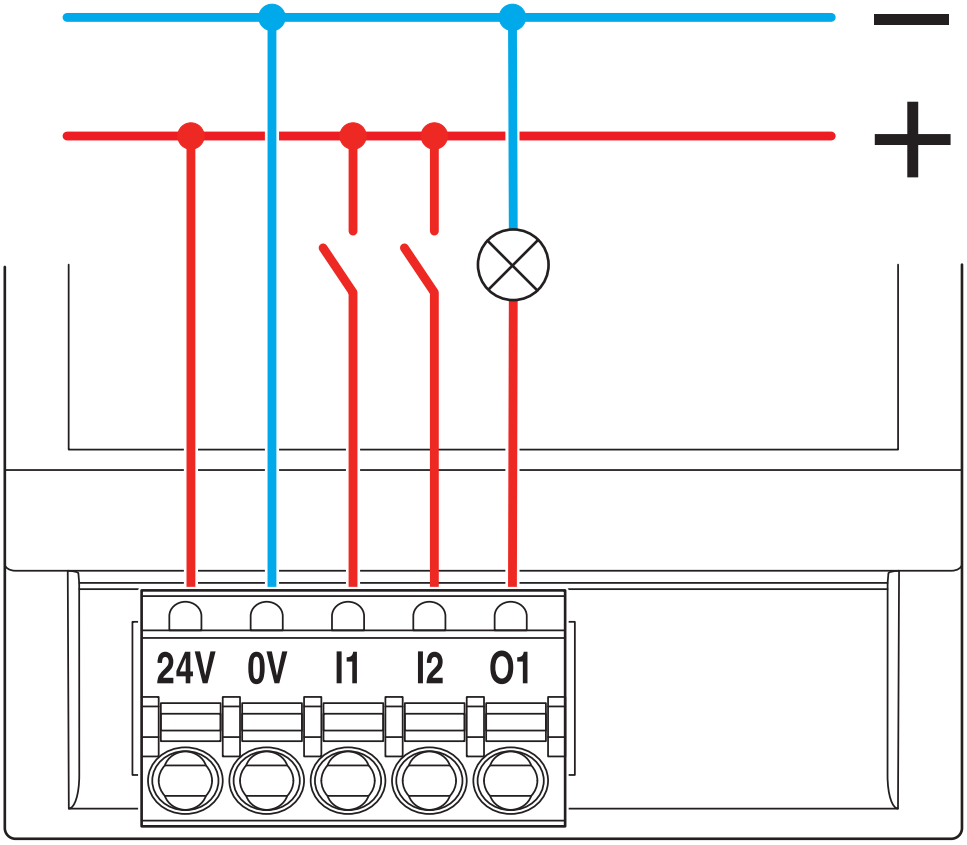

Switching inputs

Schematic diagram

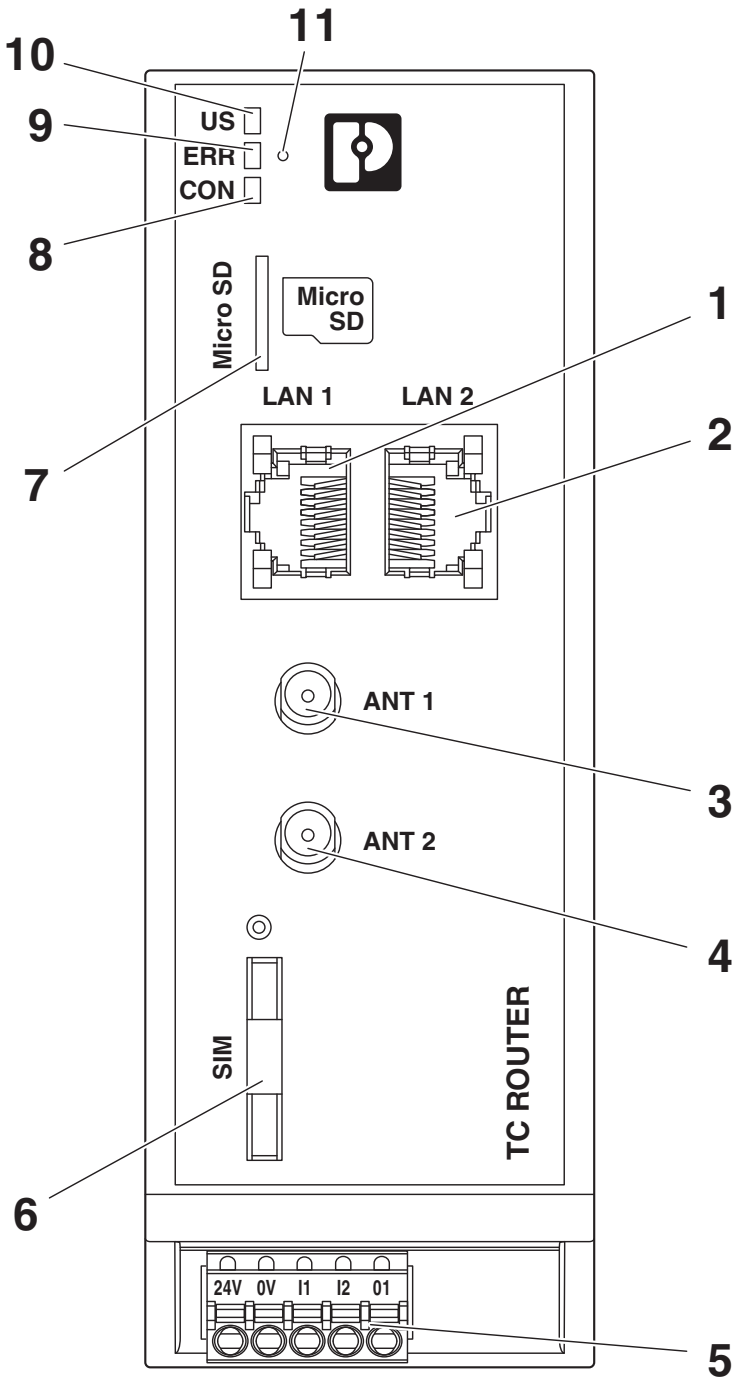

Front view

Schematic diagram

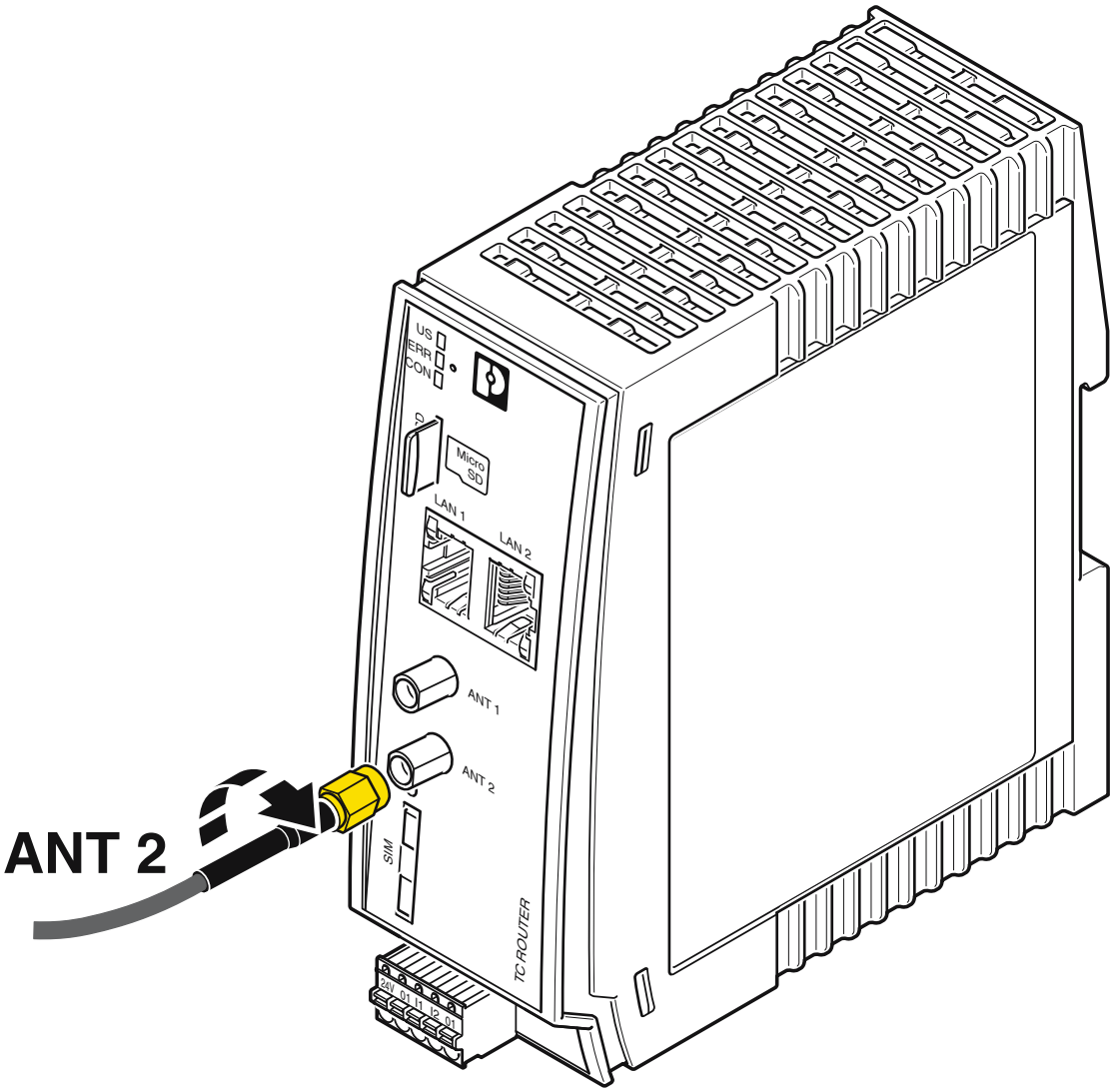

Connect the antenna

Schematic diagram

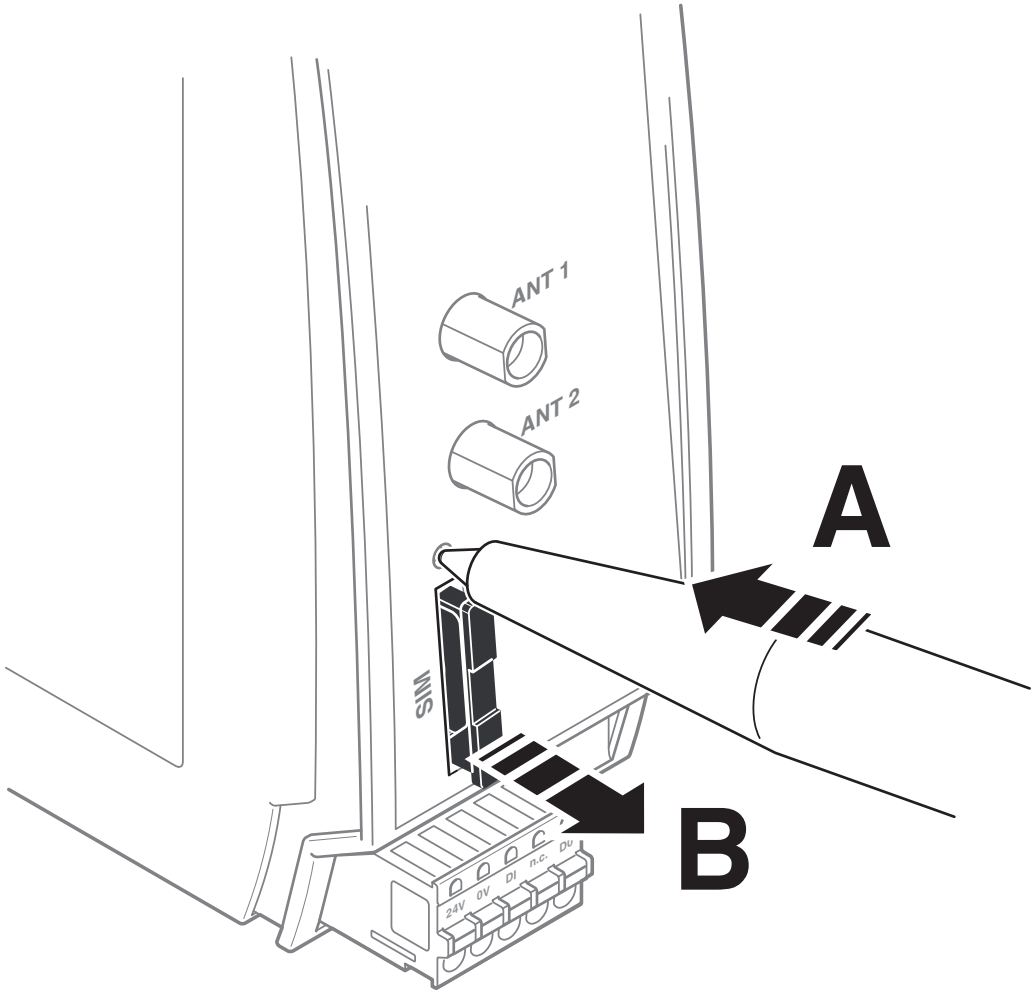

Remove SIM card holder

Schematic diagram

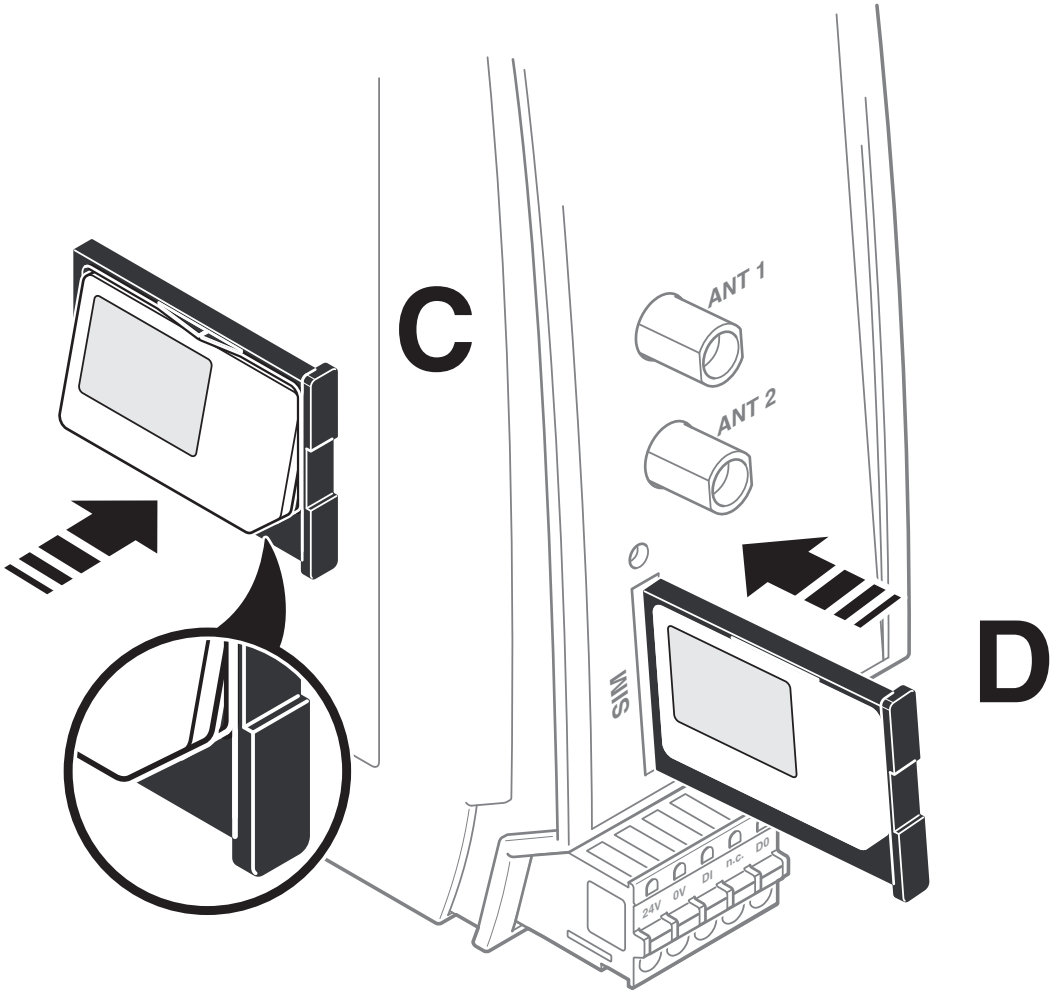

Insert the SIM card

Schematic diagram

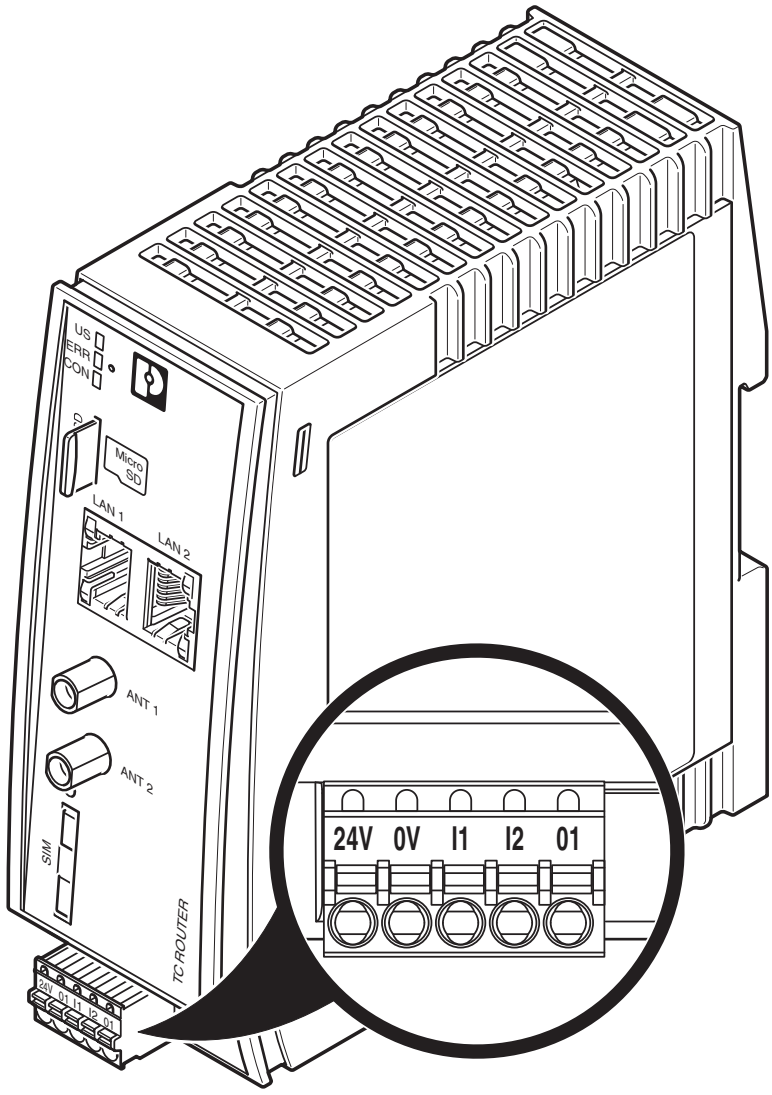

Device connections

Schematic diagram

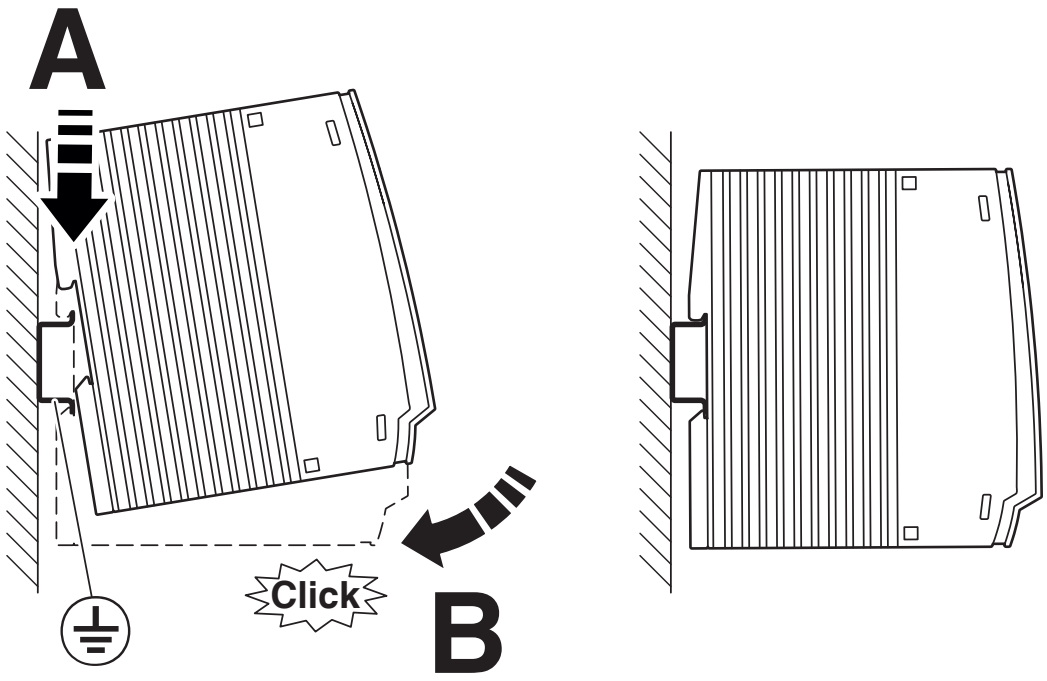

Mounting

Classifications

ECLASS

ECLASS-13.0	19170502

ETIM

ETIM 9.0	EC001478

UNSPSC

UNSPSC 21.0	43222600

Environmental product compliance

EU RoHS

Fulfills EU RoHS substance requirements	Yes, No exemptions

China RoHS

Environment friendly use period (EFUP)	EFUP-50
	An article-related China RoHS declaration table can be found in the download area for the respective article under "Manufacturer declaration". For all articles with EFUP-E, no China RoHS declaration table issued and required.

EU REACH SVHC

REACH candidate substance (CAS No.)	No substance above 0.1 wt%

Phoenix Contact 2026 © - all rights reserved
https://www.phoenixcontact.com

Phoenix Contact USA
586 Fulling Mill Road
Middletown, PA 17057, United States
(+717) 944-1300
info@phoenixcon.com