AXL F AI8 W 1F - Analog module

2702525

https://www.phoenixcontact.com/us/products/2702525

Please be informed that the data shown in this PDF document is generated from our online catalog. Please find the complete data in the user documentation. Our general terms of use for downloads are valid.

CRA-READY



The figure shows the standard item

Axioline F, Analog input module, Analog inputs: 8, 0 V ... 5 V, -5 V ... 5 V, 0 V ... 10 V, -10 V ... 10 V, 0 mA ... 20 mA, 4 mA ... 20 mA, -20 mA ... 20 mA, connection technology: 2-conductor, transmission speed in the local bus: 100 Mbps, for SAFE AI applications with service-free continuous operation, degree of protection: IP20, including bus base module and Axioline F connectors; The product is being prepared for compliance with the Cyber Resilience Act (CRA).

Product description

The module is designed for use within an Axioline F station. It is used to acquire analog voltage and current signals. The high long-term stability of the peripheral electronics ensures service-free continuous operation.

Your advantages

- 8 analog, bipolar input channels for the connection of either voltage or current signals
- Connection of sensors in 2-conductor technology
- Voltage ranges: 0 V ... 10 V, ±10 V, 0 V ... 5 V, ±5 V
- Current ranges: 0 mA ... 20 mA, 4 mA ... 20 mA, ±20 mA
- High long-term stability of measuring inputs
- Device rating plate stored
- Safe analog value processing with SAFE AI and other components

ELEKTROGERÄTE RÜCKNAHME

Commercial data

Item number	2702525
Packing unit	1 pc
Minimum order quantity	1 pc
Sales key	DR02
Product key	DRI241
GTIN	4055626210803
Weight per piece (including packing)	268.4 g
Weight per piece (excluding packing)	204 g
Customs tariff number	85389091
Country of origin	DE

Technical data

Dimensions

Dimensional drawing	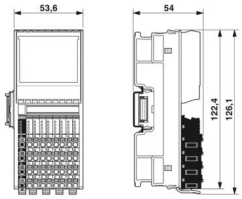
Width	53.6 mm
Height	126.1 mm
Depth	54 mm
Note on dimensions	The depth applies when a TH 35-7.5 DIN rail is used (in accordance with EN 60715).

Notes

Note on application

Note on application	Only for industrial use
Note on application	As things stand now, we are preparing the product so that, as of December 11, 2027, it will comply with the requirements of the EU Cyber Resilience Act (CRA) based on the information currently available regarding the CRA.

Mounting

Mounting type	DIN rail mounting
Mounting position	any (no temperature derating)

Material specifications

Color (Housing)	gray (RAL 7042)

Interfaces

Axioline F local bus

Number of interfaces	2
Connection method	Bus base module
Transmission speed	100 Mbps

System properties

Programming data

Input address area	16 Byte
Output address area	0 Byte

Fieldbus data telegram (PROFIBUS)

Required parameter data	11 Byte

Required configuration data	6 Byte

Input data

Analog:

Input name	Analog inputs
Description of the input	Differential inputs, voltage or current can be chosen separately
Number of inputs	8
Connection method	Push-in connection
Connection technology	2-conductor
Note regarding the connection technology	shielded, twisted pair
Process data update	300 µs
A/D conversion time	2 µs
A/D converter resolution	16 bit
Common mode voltage range signal - ground	-50 V DC ... 50 V DC
Limit frequency (3 dB)	30 Hz
	12 kHz (in fast mode)
Wire-break behavior	goes to 0 V, 0 mA; open-circuit detection for 4 mA ... 20 mA
Protective circuit	Transient protection of inputs; Suppressor diode
	Overload protection of the current inputs; No; ±5.2 V DC, maximum, I_{max} = 50 mA
	Overload protection of the voltage inputs; ±30 V DC, maximum
Measured value representation	16 bits (15 bits + sign bit)
Data formats	IB IL, S7-compatible
Current input signal	0 mA ... 20 mA
	4 mA ... 20 mA
	-20 mA ... 20 mA
Input resistance current input	104 Ω (typical)
Voltage input signal	0 V ... 5 V
	-5 V ... 5 V
	0 V ... 10 V
	-10 V ... 10 V
Input resistance of voltage input	268 kΩ (typical)
Tolerance, absolute (V)	see tables for tolerance values
Tolerance, relative	typ. 0.1 % (of upper range value for active mean value generation and 30 Hz filter)
	see tables for tolerance values
Filtering	RFI filtering / passive TP 1st order
Input filter	30 Hz, 12 kHz and mean value generation (can be parameterized)

Product properties

Product type	I/O component
Product family	Axioline F
Type	block modular

Mounting position	any (no temperature derating)
Scope of supply	including bus base module and Axioline F connectors
Special properties	The product is being prepared for compliance with the Cyber Resilience Act (CRA)
	for SAFE AI applications with service-free continuous operation

Insulation characteristics

Overvoltage category	II (IEC 60664-1, EN 60664-1)
Pollution degree	2 (IEC 60664-1, EN 60664-1)

Electrical properties

Maximum power dissipation for nominal condition	4.2 W

Potentials: Axioline F local bus supply (U_{Bus})

Supply voltage	5 V DC (via bus base module)
Current draw	max. 130 mA
	typ. 105 mA

Potentials: Supply for analog modules (U_A)

Supply voltage	24 V DC
Supply voltage range	19.2 V DC ... 30 V DC (including all tolerances, including ripple)
Current draw	max. 45 mA
	typ. 35 mA
Protective circuit	Surge protection; electronic (35 V, 0.5 s)
	Reverse polarity protection; Polarity protection diode
	Transient protection; Suppressor diode

Electrical isolation/isolation of the voltage ranges

Test voltage: 5 V supply of the local bus (U_{Bus}) / 24 V supply (I/Os)	500 V AC, 50 Hz, 1 min
Test voltage: 5 V supply of the local bus (U_{Bus}) / analog inputs	500 V AC, 50 Hz, 1 min
Test voltage: 5 V supply of the local bus (U_{Bus}) / functional ground	500 V AC, 50 Hz, 1 min
Test voltage: 24 V supply (I/O) / analog inputs	500 V AC, 50 Hz, 1 min
Test voltage: 24 V supply (I/O) / functional ground	500 V AC, 50 Hz, 1 min
Test voltage: Analog inputs / functional ground	500 V AC, 50 Hz, 1 min

Connection data

Connection technology

Connection name	Axioline F connector
Note on the connection method	Please observe the information provided on conductor cross-sections in the “Axioline F: system and installation” user manual.

Axioline F connector

Connection method	Push-in connection
Note on the connection method	Please observe the information provided on conductor cross-sections in the “Axioline F: system and installation” user manual.

Conductor cross-section, rigid	0.2 mm² ... 1.5 mm²
Conductor cross-section, flexible	0.2 mm² ... 1.5 mm²
Conductor cross-section AWG	24 ... 16
Stripping length	8 mm

Environmental and real-life conditions

Ambient conditions

Ambient temperature (operation)	-25 °C ... 60 °C
	-10 °C ... 35 °C (annual average)
Degree of protection	IP20
Air pressure (operation)	70 kPa ... 106 kPa (up to 3000 m above sea level)
Air pressure (storage/transport)	70 kPa ... 106 kPa (up to 3000 m above sea level)
Ambient temperature (storage/transport)	-40 °C ... 85 °C
Permissible humidity (operation)	5 % ... 95 % (Non-condensing, annual average < 75%)
Permissible humidity (storage/transport)	5 % ... 95 % (Non-condensing, annual average < 75%)

Mechanical test

Vibration resistance in accordance with EN 60068-2-6/IEC 60068-2-6	5g
Shock in accordance with EN 60068-2-27/IEC 60068-2-27	30g
Continuous shock in accordance with EN 60068-2-27/IEC 60068-2-27	10g

Standards and regulations

Protection class	III (IEC 61140, EN 61140, VDE 0140-1)

Drawings

Dimensional drawing

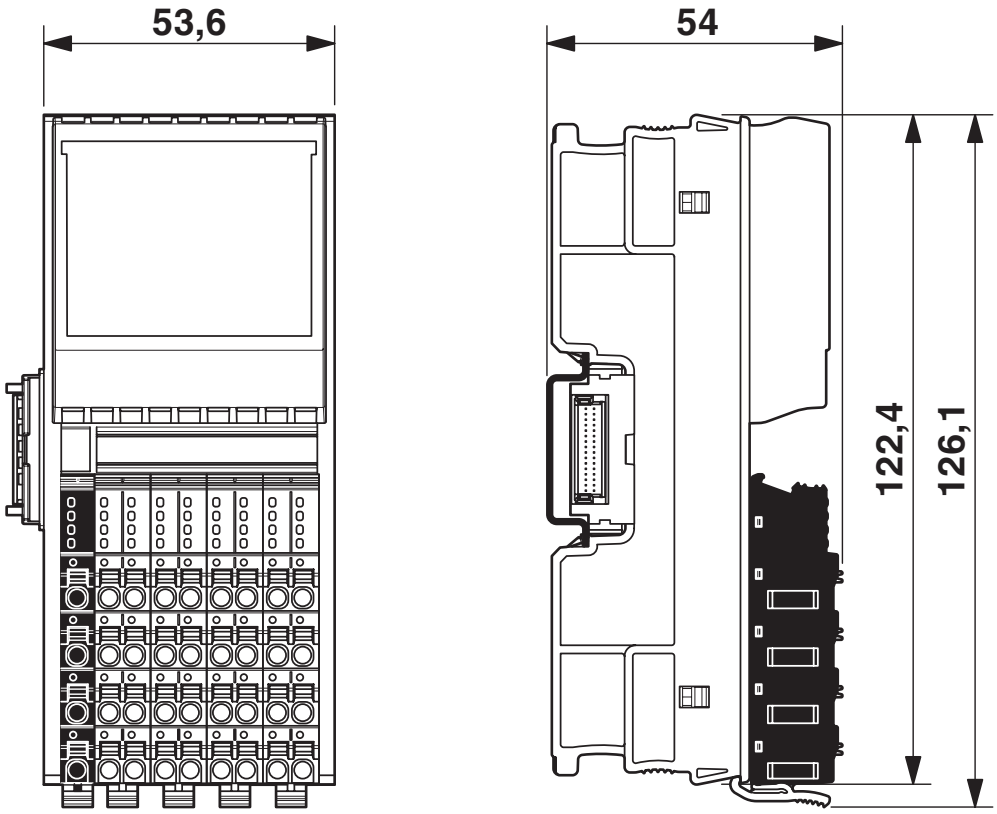

Connection diagram

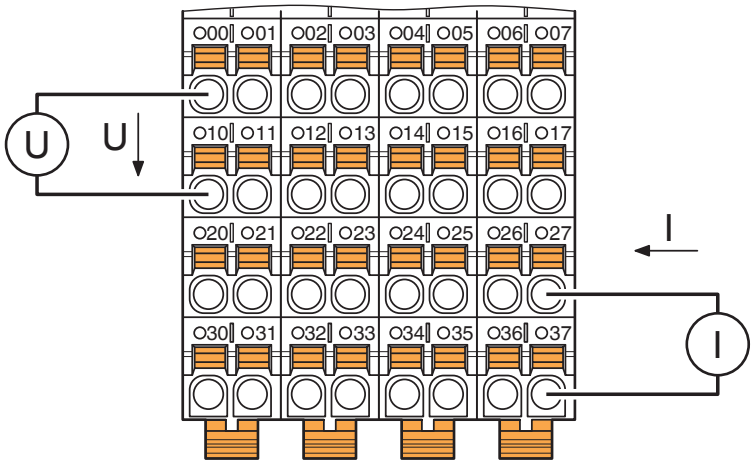

Connection for voltage and current measurement

Connection diagram

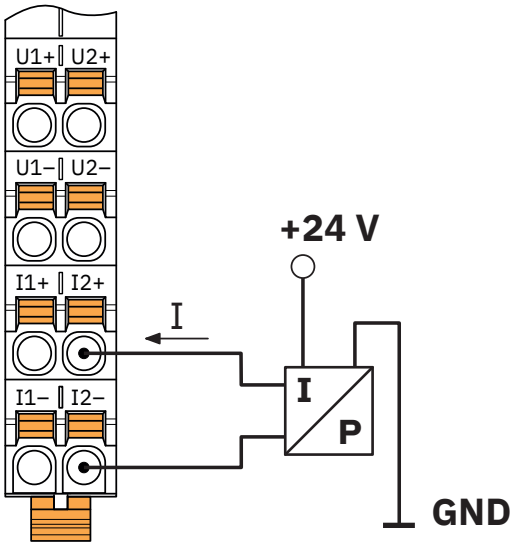

Active pressure sensor at a differential current input

Connection diagram

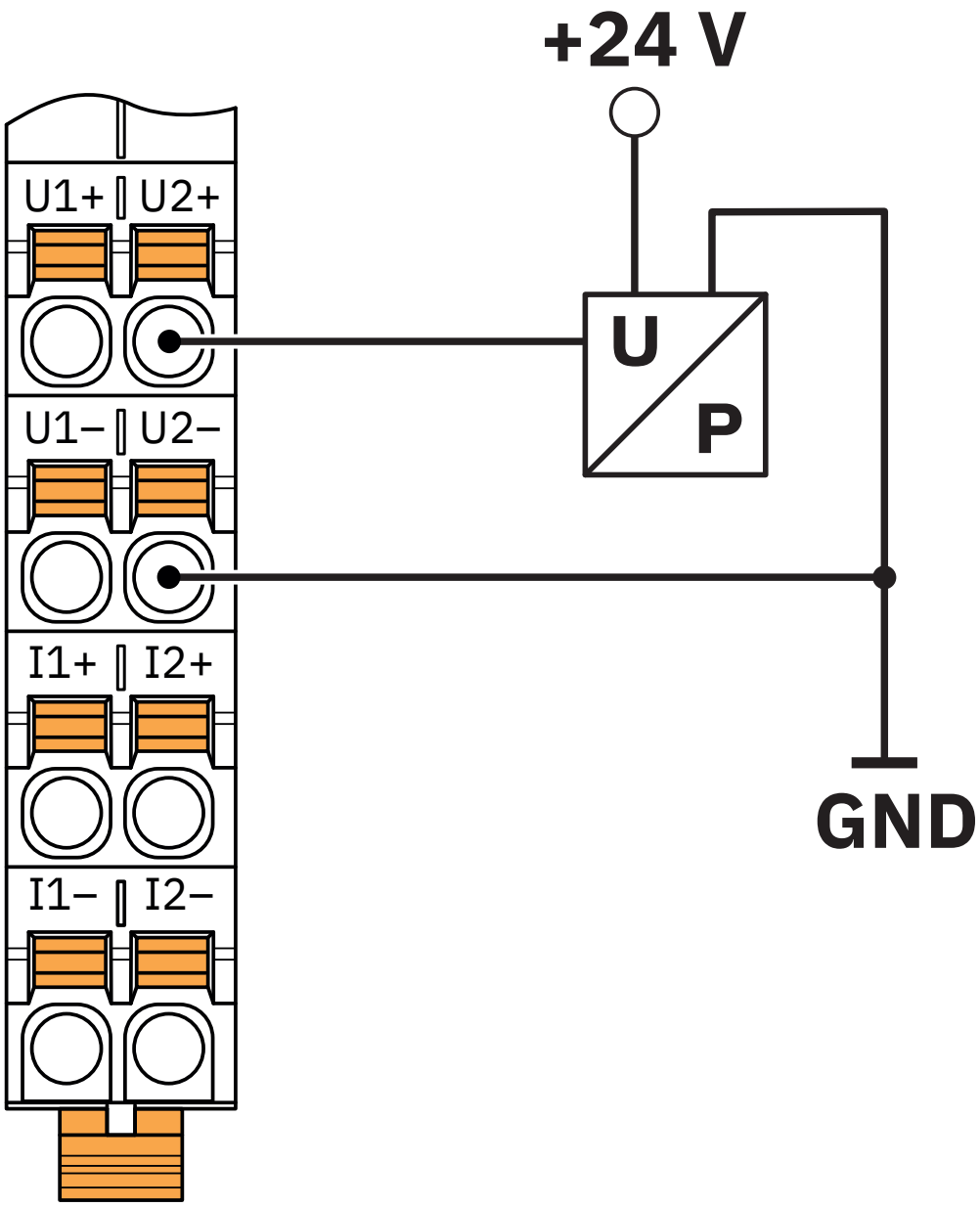

Differential voltage input with active 3-conductor transmitter

Block diagram

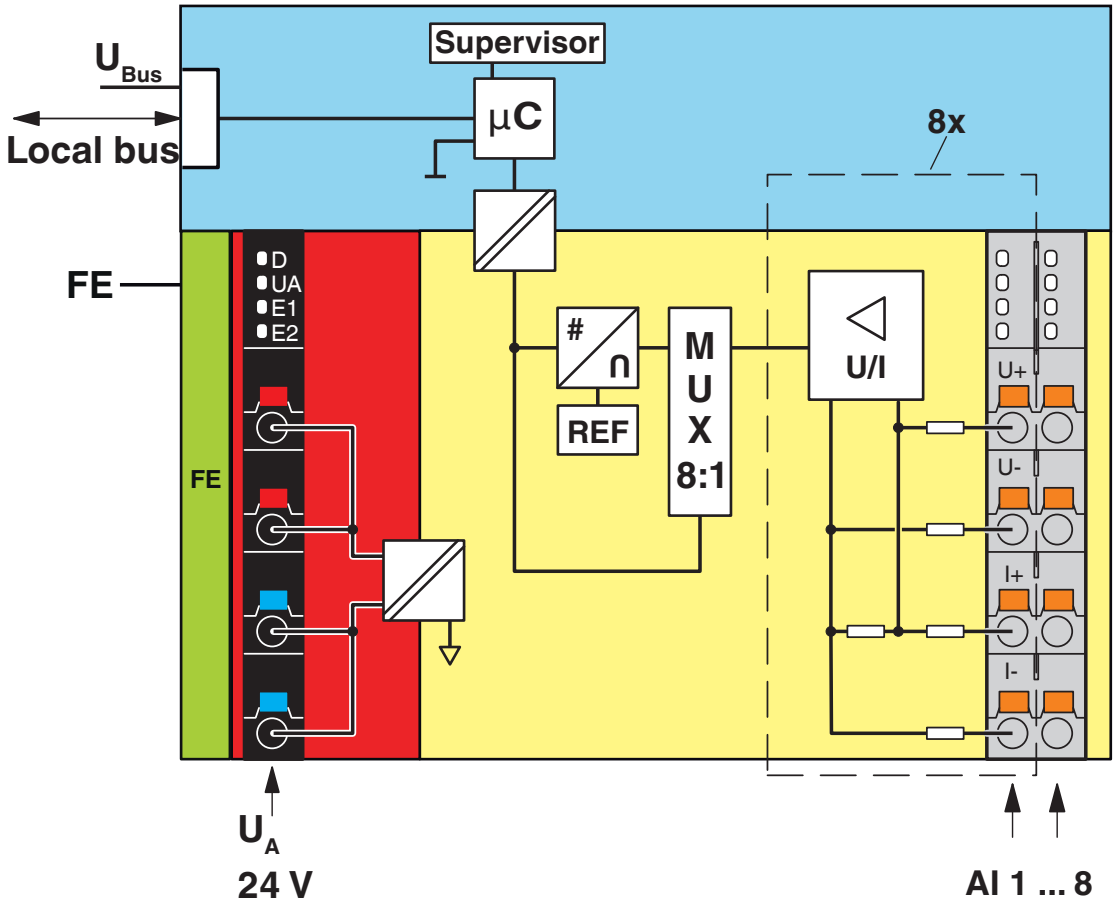

Internal wiring of the terminal points

Approvals

To download certificates, visit the product detail page: https://www.phoenixcontact.com/us/products/2702525

cULus Listed
Approval ID: E238705

Functional Safety
Approval ID: 968/EL 916.05/24

Classifications

ECLASS

ECLASS-13.0	27242601
ECLASS-15.0	27242601

ETIM

ETIM 10.0	EC001596

UNSPSC

UNSPSC 21.0	32151600

Environmental product compliance

EU RoHS

Fulfills EU RoHS substance requirements	Yes
Exemption	7(a), 7(c)-I

China RoHS

Environment friendly use period (EFUP)	EFUP-50
	An article-related China RoHS declaration table can be found in the download area for the respective article under "Manufacturer declaration". For all articles with EFUP-E, no China RoHS declaration table issued and required.

EU REACH SVHC

REACH candidate substance (CAS No.)	Lead(CAS: 7439-92-1)
SCIP	1b73886c-f0b9-428b-bdbc-02ada21852ac

Phoenix Contact 2026 © - all rights reserved
https://www.phoenixcontact.com

Phoenix Contact USA
586 Fulling Mill Road
Middletown, PA 17057, United States
(+717) 944-1300
info@phoenixcon.com