PSR-MC37-3NO-1NC-24DC-SC - Safety relays

2702411

https://www.phoenixcontact.com/us/products/2702411

Please be informed that the data shown in this PDF document is generated from our online catalog. Please find the complete data in the user documentation. Our general terms of use for downloads are valid.



Safety relay for emergency switching off and safety doors as well as for elevator applications up to SIL 3, Cat. 4, PL e, 1 or 2-channel operation, automatic or manual start, cross-circuit detection, 3 enabling current paths, U_S = 24 V DC, plug-in screw terminal block

Your advantages

- Low housing width of only 22.5mm
- 3 enabling current paths, 1 signaling current path, 1 digital signal output
- Cross-circuit detection
- Automatic and manual activation
- Up to Cat. 4/PL e in accordance with EN ISO 13849-1, SIL 3 in accordance with EN IEC 62061
- Suitable for elevator applications in accordance with EN 81-20

ELEKTROGERÄTE RÜCKNAHME

Commercial data

Item number	2702411
Packing unit	1 pc
Minimum order quantity	1 pc
Sales key	DN01
Product key	DNA181
GTIN	4055626276960
Weight per piece (including packing)	209 g
Weight per piece (excluding packing)	183.88 g
Customs tariff number	85371098
Country of origin	DE

Technical data

Notes

Note on application

Note on application	Only for industrial use

Product properties

Product type	Safety relays
Product family	PSRmini
Application	Emergency stop
	Safety door
	Magnetic switch
	Transponder
Control	1 and 2 channel
Relay type	Electromechanical relay with force-guided contacts in accordance with IEC/EN 61810-3

Insulation characteristics

Overvoltage category	II
Degree of pollution	2

Times

Typical response time	< 100 ms (automatic start)
Typ. starting time with U_s	< 100 ms (when controlled via A1)
Typical release time	< 20 ms (when controlled via A1 or S12 and S22.)
Restart time	< 1 s (Boot time)
Recovery time	< 500 ms

Electrical properties

Maximum power dissipation for nominal condition	17.03 W (U_B = 30 V , U_S = 24 V , I_S = 70 mA, I_L^2 = 72 A^2, $R_{Contact}$ = 0.2 Ω
Nominal operating mode	100% operating factor
Rated insulation voltage	250 V AC
Rated surge voltage/insulation	See data sheet, section “Insulation coordination”.

Supply

Designation	A1/A2
Rated control circuit supply voltage U_S	19.2 V DC ... 30 V DC
Rated control circuit supply voltage U_S	24 V DC -20 % / +25 %
Rated control supply current I_S	typ. 70 mA
Power consumption at U_S	typ. 1.68 W
Inrush current	2 A (Δt = 300 µs at U_s)
Protective circuit	Serial protection against polarity reversal
	Suppressor diode

Input data

Digital: Sensor circuit (S12, S22)

Description of the input	safety-related sensor inputs
Number of inputs	2
Input voltage range "0" signal	< 5 V (S12)
	0 V DC ... 5 V DC (S22)
Input current range "0" signal	< 2 mA (S12)
	0 mA ... 2 mA (S22)
Inrush current	< 5 mA (typ. with U_S at S12, Δt = 500 µs)
	< 5 mA (typ. with U_S at S22/24 V, Δt = 500 µs)
	> -5 mA (typ. with U_S at S22/0 V, Δt = 500 µs)
Filter time	max. 3 ms (at S12, S22; test pulse width; blanking pulses/dark test)
	> 1 s (at S12, S22; test pulse rate; blanking pulses/dark test)
	Where test pulse width ≤ 1 ms: test pulse rate = 5 x test pulse width
	max. 1 ms (at S12, S22; test pulse width; switch-on pulses/light test)
	> 100 ms (at S12, S22; test pulse rate; switch-on pulses/light test)
	Unless test pulses are safety-related, they should be disabled.
Max. permissible overall conductor resistance	150 Ω
Protective circuit	Suppressor diode
Current consumption	< 4 mA (typ. with U_S at S12)
	< 4 mA (typ. with U_S at S22/24 V)
	> -15 mA (typ. with U_S at S22/0 V)

Digital: Start circuit (S35)

Description of the input	non-safety-related
	NPN
Number of inputs	1
Input voltage range "1" signal	19.2 V DC ... 30 V DC
Inrush current	< 10 mA (typ. with U_S, Δt = 500 µs)
Max. permissible overall conductor resistance	150 Ω
Protective circuit	Suppressor diode
Current consumption	< 0.5 mA (typ. with U_S)

Output data

Relay: Enabling current path (13/14, 23/24, 33/34)

Output description	safety-related N/O contacts
Number of outputs	3 (undelayed)
Contact switching type	3 enabling current paths
Contact material	$AgSnO_2$
Switching voltage	min. 5 V AC/DC

	max. 250 V AC/DC
Switching power	min. 50 mW
Inrush current	min. 10 mA
	max. 6 A
Switching capacity	5 A (24 V (DC13))
	5 A (250 V (AC15))
Limiting continuous current	6 A
Sq. Total current	72 A^2 (observe derating)
Switching frequency	0.5 Hz
Mechanical service life	10x 10^6 cycles
Output fuse	6 A gL/gG (N/O contact)

Relay: Signaling current path (41/42)

Output description	non-safety-related N/C contact
Number of outputs	1 (undelayed)
Contact switching type	1 signaling current path
Contact material	$AgSnO_2$
Switching voltage	min. 5 V AC/DC
	max. 30 V AC/DC
Switching power	min. 50 mW
Inrush current	min. 10 mA
	max. 6 A (Δt = 100 ms)
Limiting continuous current	1 A
Sq. Total current	1 A^2
Switching frequency	0.5 Hz
Mechanical service life	10x 10^6 cycles
Output fuse	1 A gL/gG

Signal: Y32

Output description	non-safety-related
	PNP
Number of outputs	1 (digital)
Voltage	23 V DC (U_s - 1 V)
Current	max. 100 mA
Maximum inrush current	1 A (Δt = 5 ms at U_s)
Short-circuit protection	Yes

Connection data

Connection technology

pluggable	yes

Conductor connection

Connection method	Screw connection
Conductor cross-section rigid	0.2 mm² ... 2.5 mm²
Conductor cross-section flexible	0.2 mm² ... 2.5 mm²

Conductor cross-section AWG	24 ... 12
Stripping length	7 mm
Screw thread	M3
Tightening torque	0.5 Nm ... 0.6 Nm

Signaling

Status display	3 x LED (green)
Operating voltage display	1 x LED (green)

Dimensions

Width	22.5 mm
Height	112.2 mm
Depth	114.5 mm

Material specifications

Color (Housing)	yellow (RAL 1018)
Housing material	PA

Characteristics

Safety data

Stop category (EN 60204-1)	0

Safety data: EN ISO 13849

Performance level (PL)	e (5 A DC13; 5 A AC15; 8760 switching cycles/year)

Safety data: IEC 61508 - High demand

Safety Integrity Level (SIL)	3

Safety data: IEC 61508 - Low demand

Safety Integrity Level (SIL)	3

Safety data: EN IEC 62061

Safety Integrity Level (SIL)	3

Environmental and real-life conditions

Ambient conditions

Degree of protection	IP20
Min. degree of protection of inst. location	IP54
Ambient temperature (operation)	-40 °C ... 60 °C (observe derating)
Ambient temperature (storage/transport)	-40 °C ... 85 °C
Maximum altitude	≤ 2000 m (Above sea level)
Max. permissible humidity (storage/transport)	75 % (on average, 85% infrequently, non-condensing)
Max. permissible relative humidity (operation)	75 % (on average, 85% infrequently, non-condensing)
Shock	15g for Δt = 11 ms (continuous shock: 10g for Δt = 16 ms)
Vibration (operation)	10 Hz ... 150 Hz, amplitude 0.15 mm, 2g

Approvals

CE

Identification	CE-compliant

Mounting

Mounting type	DIN rail mounting
Assembly note	See derating curve
Mounting position	vertical or horizontal

Drawings

Circuit diagram

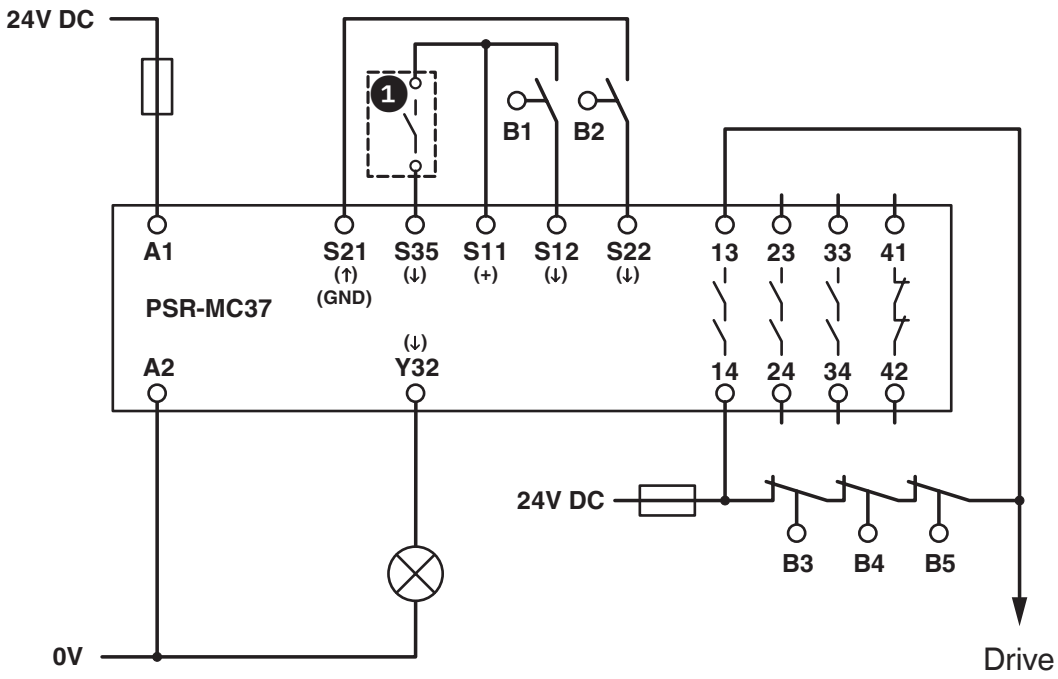

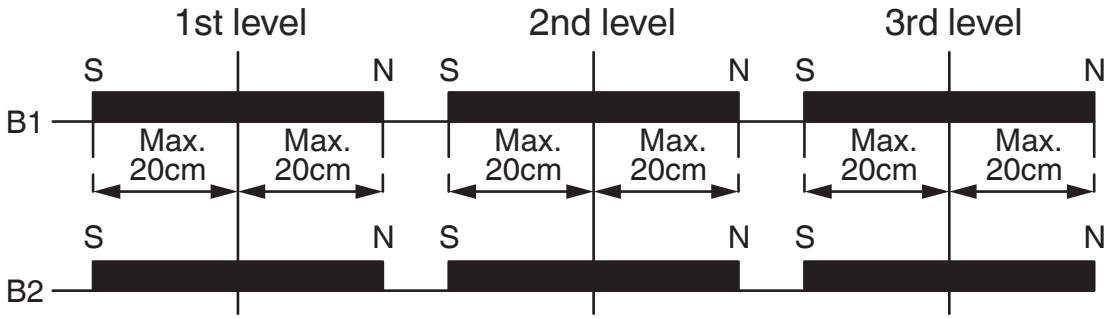

Example application

Block diagram

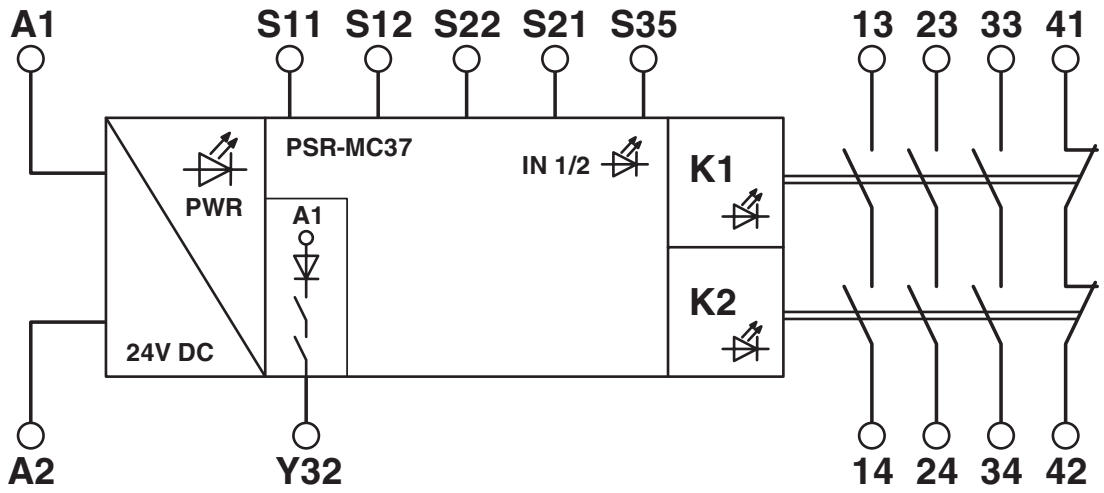

Block diagram

Approvals

To download certificates, visit the product detail page: https://www.phoenixcontact.com/us/products/2702411

cULus Listed
Approval ID: E140324

Functional Safety
Approval ID: 4420515124305

Functional Safety
Approval ID: 4478015124305

Functional Safety
Approval ID: 01_208_4A_6151_00_25

Functional Safety
Approval ID: 01/208/9/7134.00/25

Classifications

ECLASS

ECLASS-13.0	27371819
ECLASS-15.0	27371819
ECLASS-15.0 ASSET	27250101

ETIM

ETIM 10.0	EC001449

UNSPSC

UNSPSC 21.0	39122200

Environmental product compliance

EU RoHS

Fulfills EU RoHS substance requirements	Yes
Exemption	7(a), 7(a)-I, 7(c)-I

China RoHS

Environment friendly use period (EFUP)	EFUP-50
	An article-related China RoHS declaration table can be found in the download area for the respective article under "Manufacturer declaration". For all articles with EFUP-E, no China RoHS declaration table issued and required.

EU REACH SVHC

REACH candidate substance (CAS No.)	Lead(CAS: 7439-92-1)
SCIP	c6ec8599-d6d5-4a78-919b-15dc2622b818

Phoenix Contact 2026 © - all rights reserved
https://www.phoenixcontact.com

Phoenix Contact USA
586 Fulling Mill Road
Middletown, PA 17057, United States
(+717) 944-1300
info@phoenixcon.com