PLD E 400-DS-3,0/FS/0,6 - Door position switch

2702336

https://www.phoenixcontact.com/us/products/2702336

Please be informed that the data shown in this PDF document is generated from our online catalog. Please find the complete data in the user documentation. Our general terms of use for downloads are valid.



Door position switch with 3 m cable with open cable end and 0.6 m cable with M8 socket (Snap-in), including mounting accessories

Product description

This door position switch is used to automatically switch the class 400 PLD enclosure lights on or off when opening or closing the control cabinet door. If the enclosure lights are connected in series, this door position switch is to be used before the first light.

Commercial data

Item number	2702336
Packing unit	1 pc
Sales key	DR08
Product key	DRL23Z
GTIN	4055626127453
Weight per piece (including packing)	179 g
Weight per piece (excluding packing)	174 g
Customs tariff number	85365080
Country of origin	HU

Technical data

Product properties

Product type	Door position switch
Mounting position	any
Mechanical service life	10x 10^6 cycles

Electrical properties

Rated voltage	24 V DC
Rated current	3 A

Dimensions

Dimensional drawing	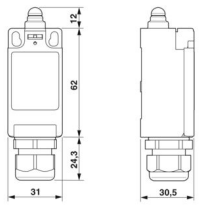
Width	31 mm
Height	30.5 mm
Depth	98.3 mm
Note on dimensions	Without connected cables

Material specifications

Color	black
Material	Thermoplastic, fiber-reinforced
	PUR

Environmental and real-life conditions

Ambient conditions

Degree of protection	IP54
Ambient temperature (operation)	-30 °C ... 80 °C

Standards and regulations

Protection class	II

Mounting

Mounting position	any

Drawings

Dimensional drawing

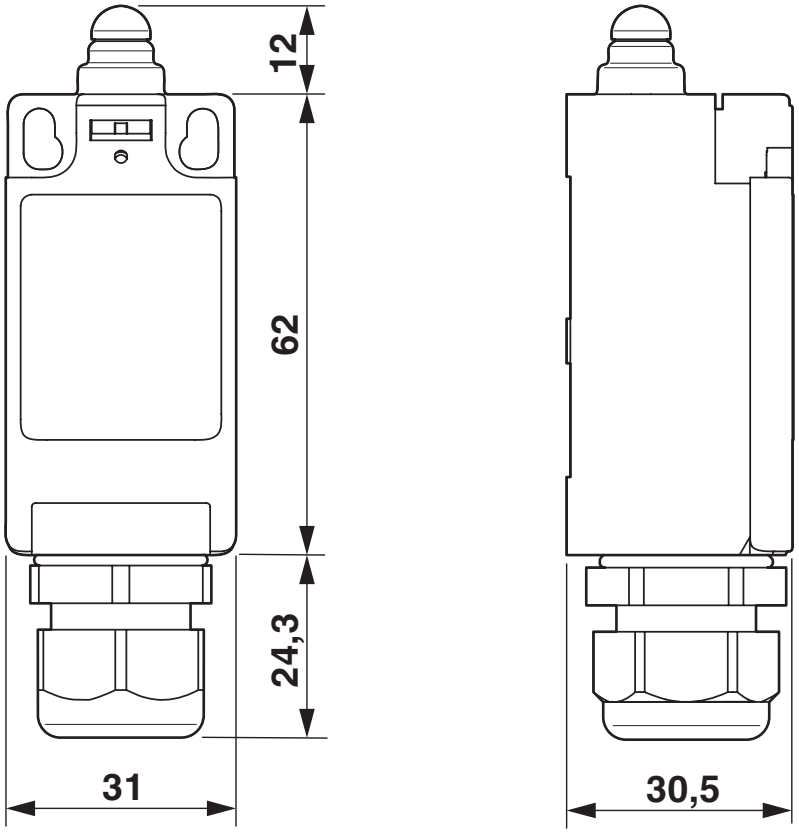

Dimensions

Circuit diagram

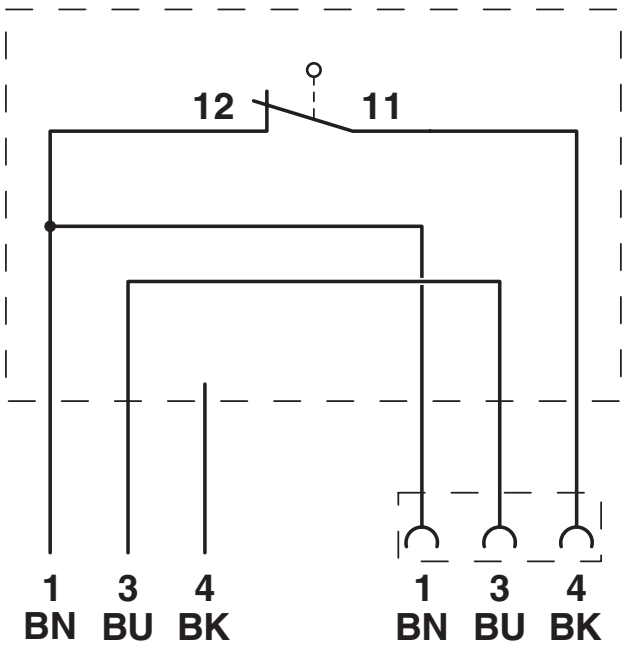

Classifications

UNSPSC

UNSPSC 21.0	39111500

Environmental product compliance

EU RoHS

Fulfills EU RoHS substance requirements	Yes
Exemption	6(c)

China RoHS

Environment friendly use period (EFUP)	EFUP-50
	An article-related China RoHS declaration table can be found in the download area for the respective article under "Manufacturer declaration". For all articles with EFUP-E, no China RoHS declaration table issued and required.

EU REACH SVHC

REACH candidate substance (CAS No.)	No substance above 0.1 wt%

Phoenix Contact 2026 © - all rights reserved
https://www.phoenixcontact.com

Phoenix Contact USA
586 Fulling Mill Road
Middletown, PA 17057, United States
(+717) 944-1300
info@phoenixcon.com