FL SWITCH 2207-FX - Industrial Ethernet Switch

2702328

https://www.phoenixcontact.com/us/products/2702328

Please be informed that the data shown in this PDF document is generated from our online catalog. Please find the complete data in the user documentation. Our general terms of use for downloads are valid.

CRA-READY



Managed Switch 2000 series, 7 RJ45 ports 10/100 Mbps, 1 SC multi-mode 100 Mbps, degree of protection: IP20, Ambient temperature (operation): -40 °C ... 70 °C, Supply voltage range: 9 V DC ... 57 V DC, PROFINET Conformance Class B, Extended temperature range, Development process certified in accordance with IEC 62443-4-1, Product certified in accordance with IEC 62443-4-2, The product is being prepared for compliance with the Cyber Resilience Act (CRA)

Your advantages

- Ambient temperature -40 °C ... 70 °C
- RSTP
- DHCP client, DHCP server (pool-based and port-based), DHCP option 82
- VLANs
- MRP (client and manager)
- Slim design
- Web-based management, SNMP
- Configuration memory
- Easy and fast startup and commissioning with the FL NETWORK MANAGER software
- Suitable for PROFINET and EtherNet/IP™ networks

ELEKTROGERÄTE RÜCKNAHME

Commercial data

Item number	2702328

Packing unit	1 pc
Minimum order quantity	1 pc
Sales key	DN17
Product key	DNN121
GTIN	4055626128948
Weight per piece (including packing)	337 g
Weight per piece (excluding packing)	240 g
Customs tariff number	85176200
Country of origin	DE

Technical data

Dimensions

Dimensional drawing	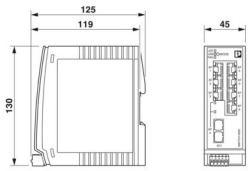
Width	45 mm
Height	130 mm
Depth	119 mm

Notes

Note on application	Support by phone or on-site (fee is charged)
Note on application	Only for industrial use
Note on application	As things stand now, we are preparing the product so that, as of December 11, 2027, it will comply with the requirements of the EU Cyber Resilience Act (CRA) based on the information currently available regarding the CRA.

Material specifications

Color (Housing)	gray (RAL 7042)
Color (Cover)	light gray (RAL 7035)
Housing material	Polycarbonate fiber reinforced

Mounting

Mounting type	DIN rail mounting

Interfaces

Ethernet (RJ45)

Connection method	RJ45
Note on the connection method	Auto negotiation and autocrossing
Transmission speed	10/100 Mbps
Transmission physics	Copper
Transmission length	100 m (per segment)
Signal LEDs	Data receive, link status
No. of channels	7 (RJ45 ports)

Ethernet FO

Number of interfaces	1
Connection method	SC
Transmission speed	100 Mbps (full duplex)
Transmit capacity, minimum	-19 dBm

Transmit capacity, maximum	-14 dBm
Minimum receiver sensitivity	-32 dBm
Maximum receiver sensitivity	-14 dBm
Transmission physics	multi-mode fiberglass
Transmission length	11000 m (fiberglass with F-G 62.5/125 0.7 dB/km F1000)
	6400 m (fiberglass with F-G 50/125 0.7 dB/km F1200)
	3000 m (fiberglass with F-G 62.5/125 2.6 dB/km F600)
	2800 m (fiberglass with F-G 50/125 1.6 dB/km F800)
Wavelength	1300 nm
Signal LEDs	Data receive, link status
No. of channels	1 (SC multi-mode)

Output data

Digital:

Output name	Alarm output

Signal contact

Output name	Digital output
Control voltage	typ. 24 V DC
Actuation voltage range	9 V DC ... 57 V DC
Current carrying capacity	typ. 100 mA
	max. 0.7 A (1 minute)

Product properties

Product type	Switch
Product family	Managed Switch 2000
Type	Book type
MTTF	404.22 Years (SN 29500 standard, temperature 25°C, operating cycle 21%)
	185.13 Years (SN 29500 standard, temperature 40°C, operating cycle 34.25%)
	22.87 Years (SN 29500 standard, temperature 70°C, operating cycle 100%)
Special properties	Extended temperature range
	Development process certified in accordance with IEC 62443-4-1
	Product certified in accordance with IEC 62443-4-2
	The product is being prepared for compliance with the Cyber Resilience Act (CRA)
Signal delay	≥ 6.5 µs (Store and Forward mode, 10/100 Mbps, depending on the frame size)

Insulation characteristics

Protection class	III (VDE 0106)
Degree of pollution	2

Switch functions

IP parameterization	DHCP client
	DHCP Option 82 (Relay Agent)
	DHCP server (pool-based, port-based)
	BootP
	DCP (Discovery and Configuration Protocol)
MAC address table	8k
Signal contact control voltage	typ. 24 V DC
PROFINET conformance class	Conformance Class B
PROFINET device function	PROFINET device
	Fast Startup
Status and diagnostic indicators	LEDs: US1, US2 (power supply), Fail (alarm contact), 2 LEDs per Ethernet port (Link/Activity and Speed)
Basic functions	Store-and-forward switch, complies with IEEE 802.3
Management functions	Web-based management (HTTP/HTTPS)
	Role-based user management (LDAP, RADIUS)
	SNMPv1/v2/v3
	Command Line Interface (Telnet, SSH)
Diagnostic functions	RMON History
	LLDP (Link Layer Discovery Protocol)
	SNMP-Traps
	N:1-Portmirroring
	ACD (Address Conflict Detection)
	SysLog
	CRC-Surveillance
Filter functions	Quality of Service (8 priority classes)
	Class of Service
	DiffServ/DSCP
	Port-Priorisierung
	VLAN (up to 32 VLANs)
	IGMP Snooping/Querier (v1/v2)
	Auto-Query-Port
	Extended Multicast Filtering
Redundancy functions	MRP (Media Redundancy Protocol)
	RSTP (Rapid Spanning Tree Protocol)
	FRD (Fast Ring Detection)
	Large Tree Support
	LACP (Link Aggregation Control Protocol)
	PROFINET S2 system redundancy
Time synchronization	SNTP (Simple Network Time Protocol)
Additional functions	Transmission of MMS and GOOSE (IEC 61850-8-1)
	Transmission of Modbus/TCP

Security functions

Port security	MAC-based, RADIUS (IEEE 802.1X), MAC Authentication Bypass

Electrical properties

Current consumption	220 mA
Local diagnostics	US1/2 Supply voltage US1, US2 Green LED
	FAIL Div. LED red
	LINK Link status Green LED
Maximum power dissipation for nominal condition	5.85 W (U_S = Min, T_{amb} = Max, DO_I = Max)
Test section	24 V supply / functional ground 500 V DC 1 min
	Ethernet interface/all other potentials 2.25 kV DC 1 min
Transmission medium	Copper
	FO

Supply

Supply voltage (DC)	24 V DC (redundant)
Supply voltage range	9 V DC ... 57 V DC
Power supply connection	via COMBICON, max. conductor cross-section 1.5 mm²
Residual ripple	3.6 V_{PP} (within the permitted voltage range)
Max. current consumption	1.4 A (U_S = Min, T_{amb} = Max, DO_I = Max)
Typical current consumption	220 mA (at U_S = 24 V DC and 25 °C ambient temperature)
Current consumption	220 mA
Ground connection	Via DIN rail
Functional grounding	The functional ground of the module is grounded when it is snapped onto a grounded DIN rail

Connection data

Connection method	Push-in spring connection
Note on the connection method	Use only copper connecting cables providing the permitted temperature range (-40 °C ... 75 °C)
pluggable	yes
Conductor cross-section, rigid	0.25 mm² ... 1.5 mm²
Conductor cross-section, flexible	0.25 mm² ... 1.5 mm²
Conductor cross-section AWG	24 ... 16
Stripping length	9 mm

Environmental and real-life conditions

Ambient conditions

Degree of protection	IP20
Ambient temperature (operation)	-40 °C ... 70 °C
Ambient temperature (storage/transport)	-40 °C ... 85 °C
Permissible humidity (operation)	10 % ... 95 % (non-condensing)
Permissible humidity (storage/transport)	10 % ... 95 % (non-condensing)
Shock (operation)	30g (EN 60068-2-27)
Vibration (operation)	in acc. with IEC 60068-2-6: 5g, 150 Hz
Air pressure (operation)	80 kPa ... 110 kPa up to 2000 m above mean sea level (Without derating)

Air pressure (storage/transport)	79 kPa ... 108 kPa up to 2000 m above mean sea level (Without derating)

Standards and regulations

Free from substances that could impair the application of coating	Yes

Approvals

Shipbuilding approval	Tested in accordance with IEC 60945 and IACS E10

ATEX

Identification	Ⓔx II 3 G Ex ec IIC T4 Gc
Certificate	DEMKO 16 ATEX 1709X

IECEx

Identification	Ex ec IIC T4 Gc
Certificate	IECEx ULD 16.0018 X

UL, USA/Canada

Identification	cULus

UL Ex, USA / Canada

Identification	Class I, Division 2, Groups A, B, C, and D, T4
	Class I, Zone 2, AEx ec IIC T4
	Ex ec IIC T4 Gc X
Certificate	E366272
Note	UL 60079-0 Ed. 6 / UL 60079-7 Ed. 5, CSA 22.2 No. 60079-0 Ed. 3 / CSA C22.2 No. 60079-7 Ed. 2

EAC Ex

Identification	2Ex e IIC T4 Gc X
Certificate	RU C-DE.HB49.B.00118/21

The following continue to apply for EAC Ex:

Identification	Install the device in a suitable, approved housing with at least IP66 protection.
	The housing/control cabinet must be equipped with a warning sign prohibiting opening in the potentially explosive area.
	The operation of devices is permitted if all optical ports are connected or sealed with the supplied filler plugs.

CCC / China-Ex

Identification	Ex ec IIC T4 Gc
Certificate	2022122310115629

Corrosive gas test

Identification	ISA S71.04.2013 G3 Harsh Group A

UKCA Ex (UKEX)

Identification	Ⓔx II 3 G Ex ec IIC T4 Gc
Certificate	PxCIMA22UKEX2702910X

Shipbuilding data

Temperature	B
Humidity	B
Vibration	A
EMC	B
Enclosure	Required protection according to the Rules shall be provided upon installation on board

EMC data

Electromagnetic compatibility	Conformance with EMC Directive 2014/30/EU
Conformance with EMC directives	EN 61000-6-2 EN 61000-4-2 (ESD) Criterion B
	EN 61000-6-2 EN 61000-4-3 (electromagnetic fields) Criterion A
	EN 61000-6-2 EN 61000-4-4 (EFT burst) Criterion A
	EN 61000-6-2 EN 61000-4-5 (surge) Criterion B
	EN 61000-6-2 EN 61000-4-6 (line noise immunity) Criterion A
	EN 61000-6-2 EN 61000-6-4 (interference) Class A
	EN 61000-6-2 EN 61000-6-4 (conducted interference) Class A
Noise immunity	EN 61000-6-2

Noise emission

Standards/regulations	EN 61000-6-4

Signaling

Status display	LEDs: US1, US2 (power supply), Fail (alarm contact), 2 LEDs per Ethernet port (Link/Activity and Speed)

Drawings

Dimensional drawing

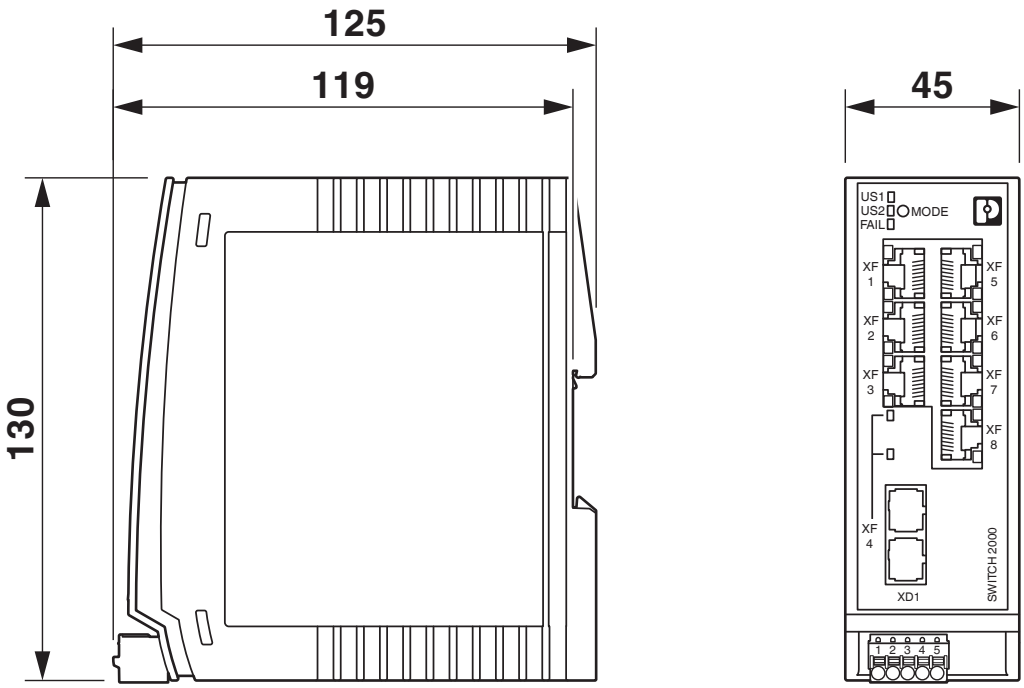

Approvals

To download certificates, visit the product detail page: https://www.phoenixcontact.com/us/products/2702328

DNV GL
Approval ID: TAA00000YV

LR
Approval ID: LR22250919TA

NK
Approval ID: TA24215M

BV
Approval ID: 48146_B1 BV

BSH
Approval ID: Nr. 966

RINA
Approval ID: ELE014724XG001

ABS
Approval ID: 21_2066186_1_PDA

cULus Listed
Approval ID: E238705

Cybersecurity Certificate
Approval ID: 968 CSP 1043.00 25

ABS
Approval ID: 26-0501235-PDA

IECEx
Approval ID: IECEx ULD 16.0018X

ATEX
Approval ID: DEMKO 16 ATEX 1709X

CCC
Approval ID: 2022122310115629

cULus Listed
Approval ID: E366272

Classifications

ECLASS

ECLASS-13.0	19170401
ECLASS-15.0	19170401

ETIM

ETIM 10.0	EC000734

UNSPSC

UNSPSC 21.0	43222600

Environmental product compliance

EU RoHS

Fulfills EU RoHS substance requirements	Yes
Exemption	7(a), 7(c)-I

China RoHS

Environment friendly use period (EFUP)	EFUP-50
	An article-related China RoHS declaration table can be found in the download area for the respective article under "Manufacturer declaration". For all articles with EFUP-E, no China RoHS declaration table issued and required.

EU REACH SVHC

REACH candidate substance (CAS No.)	Lead(CAS: 7439-92-1)
SCIP	fdab6972-fc8f-4fdc-ad87-b9f2437ae78b

Phoenix Contact 2026 © - all rights reserved
https://www.phoenixcontact.com

Phoenix Contact USA
586 Fulling Mill Road
Middletown, PA 17057, United States
(+717) 944-1300
info@phoenixcon.com