GW PL ETH/BASIC-BUS - Ethernet HART multiplexer

2702321

https://www.phoenixcontact.com/us/products/2702321

Please be informed that the data shown in this PDF document is generated from our online catalog. Please find the complete data in the user documentation. Our general terms of use for downloads are valid.



Ethernet head station for modular HART gateway. Connect up to five GW PL HART…-BUS expansion modules to communicate with up to 40 HART devices. Supports Modbus TCP, HART IP, FDT/DTM and Arcom.

Product description

Ethernet HART multiplexer provides a simple way to parameterize and monitor HART instruments on an Ethernet network and is an ideal replacement for RS-485 HART multiplexer systems. The multiplexer allows users to perform time and money saving operations from the comfort of an office – including loop checks, device calibration, and improved process monitoring with multivariable devices.

Your advantages

- Independent HART controller per channel ensures fastest update rates
- Available communication DTM integrates into an FDT/DTM container and provides the ability to remotely configure HART instruments
- Monitor PV, SV, TV, QV HART variables using Modbus TCP
- Extended temperature range of -40 °C … +70 °C
- Supports Arcom for simple integration into Emerson AMS

ELEKTROGERÄTE RÜCKNAHME

Commercial data

Item number	2702321
Packing unit	1 pc
Minimum order quantity	1 pc
Sales key	DN11
Product key	DNC322
GTIN	4055626134390
Weight per piece (including packing)	223 g

Weight per piece (excluding packing)	157 g
Customs tariff number	85176200
Country of origin	US

Technical data

Notes

Note on application

Note on application	Only for industrial use

Utilization restriction

CCCex note	Use in potentially explosive areas is not permitted in China.

Product properties

Product type	Gateways/Proxies
MTBF	292 Years (Siemens model SN29500, temperature 40°C, env. factor 1.5 and stress factor 50%)

Electrical properties

Test voltage data interface/power supply	500 V AC

Supply

Supply voltage range	19.2 V DC ... 30 V DC
Typical current consumption	45 mA (at 24 V DC)
Max. current consumption	62 mA (at 24 V DC)

Interfaces

Web server	yes

Data

Transmission length	≤ 100 m
Output nominal voltage	24 V DC
Maximum output current	3.937 A (per station)

Data: Modbus/TCP, HART IP

Connection method	RJ45 socket, auto negotiation and auto crossing
Protocols supported	TCP/IP, HART IP, Modbus/TCP

Signaling

Status display	Green LED (power and status)

Dimensions

Dimensional drawing	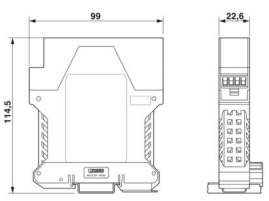
Width	22.5 mm

Height	99 mm
Depth	114.5 mm

Material specifications

Color (Housing)	light gray (RAL 7035)

Environmental and real-life conditions

Ambient conditions

Degree of protection	IP20
Ambient temperature (operation)	-40 °C ... 70 °C
Ambient temperature (storage/transport)	-40 °C ... 85 °C

Approvals

Conformity/Approvals

Conformance	CE-compliant
Noxious gas test	ISA-S71.04-1985 G3 Harsh Group A

Ex data

ATEX	Ⓔx II 3 G Ex nA IIC T4 Gc DEMKO 17 ATEX 1749X
IECEx	IECEx ULD 17.0020X Ex nA IIC T4 Gc
UL, USA / Canada	Class I, Div. 2, Groups A, B, C, D

EMC data

Electromagnetic compatibility	Conformance with EMC Directive 2004/108/EC

Mounting

Mounting type	DIN rail mounting
Assembly note	on standard DIN rail NS 35 in accordance with EN 60715
Mounting position	any
Useable DIN rail type	DIN rail: 35 mm

Drawings

Dimensional drawing

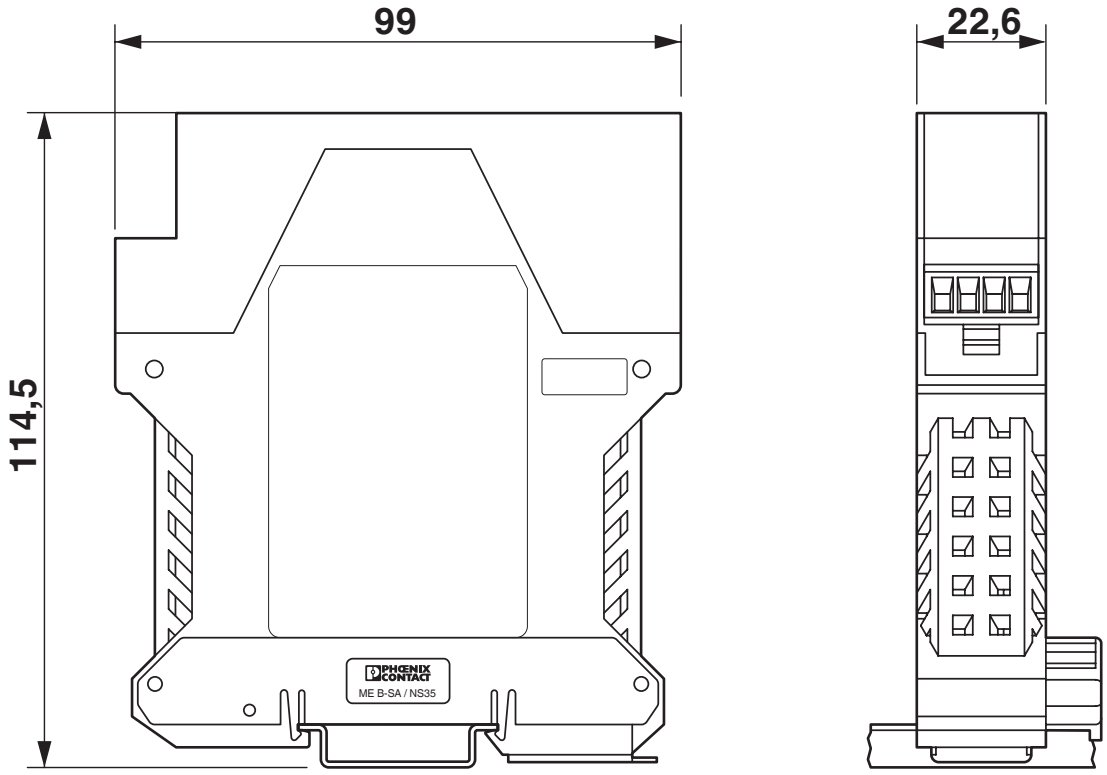

Block diagram

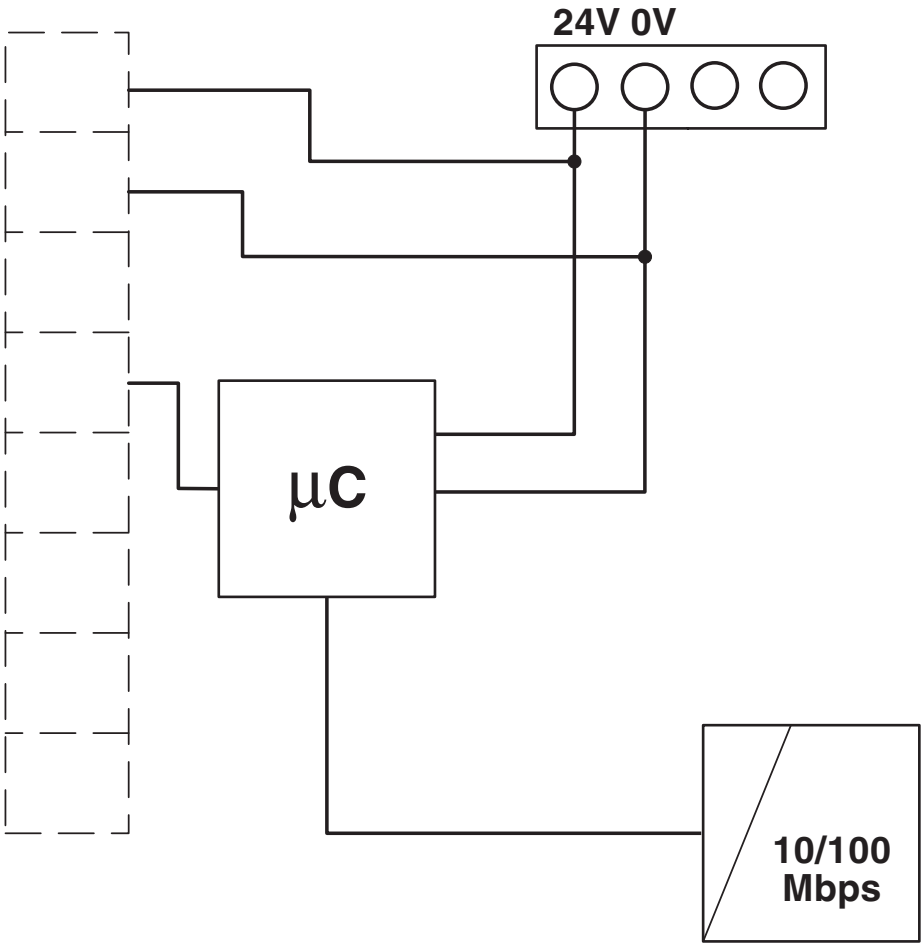

Classifications

ECLASS

ECLASS-13.0	27242208
ECLASS-15.0	27242208

ETIM

ETIM 10.0	EC001423

UNSPSC

UNSPSC 21.0	32151700

Environmental product compliance

EU RoHS

Fulfills EU RoHS substance requirements	Yes, No exemptions

China RoHS

Environment friendly use period (EFUP)	EFUP-E
	No hazardous substances above the limits

EU REACH SVHC

REACH candidate substance (CAS No.)	No substance above 0.1 wt%

Phoenix Contact 2026 © - all rights reserved
https://www.phoenixcontact.com

Phoenix Contact USA
586 Fulling Mill Road
Middletown, PA 17057, United States
(+717) 944-1300
info@phoenixcon.com