AXL F DI8/1 DO8/1 XC 1H - Digital module

2702017

https://www.phoenixcontact.com/us/products/2702017

Please be informed that the data shown in this PDF document is generated from our online catalog. Please find the complete data in the user documentation. Our general terms of use for downloads are valid.

CRA-READY



The figure shows the standard item

Axioline F, Digital I/O module, Digital inputs: 8, 24 V DC, connection technology: 1-conductor, Digital outputs: 8, 24 V DC, 500 mA, connection technology: 1-conductor, Extreme conditions version, transmission speed in the local bus: 100 Mbps, degree of protection: IP20, including bus base module and Axioline F connectors; The product is being prepared for compliance with the Cyber Resilience Act (CRA).

Product description

The module is designed for use within an Axioline F station. It is used to acquire and output digital signals. The filter times of the inputs can be adjusted to increase noise immunity. Filter times of 100 µs enable the user to implement a counting function with a maximum input frequency of 5 kHz in the application. The outputs are protected against short circuit and overload.

Your advantages

- 8 digital inputs in accordance with EN 61131-2 type 1 and type 3
- 24 V DC, 2.4 mA
- Connection of sensors in 1-conductor technology
- Filter times can be adjusted in three increments: < 100 µs, 1000 µs or 3000 µs
- Maximum input frequency: 5 kHz
- 8 digital outputs
- 24 V DC, 500 mA
- Connection of actuators in 1-conductor technology
- Minimum update time of < 100 µs
- Device rating plate stored
- Can be used under extreme ambient conditions
- Extended temperature range of -40 °C ... +70 °C (see “Tested successfully: use under extreme ambient conditions” in the data sheet)
- Partially coated PCBs



Commercial data

Item number	2702017
Packing unit	1 pc
Minimum order quantity	1 pc
Sales key	DR02
Product key	DRI233
GTIN	4046356901246
Weight per piece (including packing)	203.5 g
Weight per piece (excluding packing)	132.88 g
Customs tariff number	85389091
Country of origin	DE

Technical data

Dimensions

Dimensional drawing	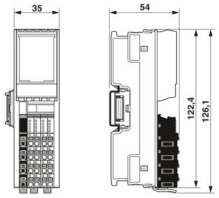
Width	35 mm
Height	126.1 mm
Depth	54 mm
Note on dimensions	The depth applies when a TH 35-7.5 DIN rail is used (in accordance with EN 60715).

Notes

Note on application	Only for industrial use
Note on application	As things stand now, we are preparing the product so that, as of December 11, 2027, it will comply with the requirements of the EU Cyber Resilience Act (CRA) based on the information currently available regarding the CRA.

Utilization restriction

EMC note	EMC: class A product, see manufacturer's declaration in the download area

Mounting

Mounting type	DIN rail mounting
Mounting position	any (no temperature derating)

Material specifications

Color (Housing)	gray (RAL 7042)

Interfaces

Axioline F local bus

Number of interfaces	2
Connection method	Bus base module
Transmission speed	100 Mbps

System properties

Programming data

Input address area	1 Byte
Output address area	1 Byte

Fieldbus data telegram (PROFIBUS)

Required parameter data	3 Byte
Required configuration data	7 Byte

Input data

Digital:

Input name	Digital inputs
Description of the input	EN 61131-2 types 1 and 3
Number of inputs	8
Connection method	Push-in connection
Connection technology	1-conductor
Input voltage range "0" signal	-3 V DC ... 5 V DC
Input voltage range "1" signal	11 V DC ... 30 V DC
Nominal input voltage U_{IN}	24 V DC
Nominal input current at U_{IN}	2.4 mA
Current flow	linear until nominal current is reached, then constantly approx. 2. 4 mA
Input filter time	3000 µs (Default)
	1000 µs
	< 100 µs
Process data update	< 100 µs
Protective circuit	Polarity reversal protection of the inputs; parallel diode (30 V, 5 s)

Output data

Digital:

Output name	Digital outputs
Design of digital output	Semiconductor
Connection method	Push-in connection
Connection technology	1-conductor
Number of outputs	8
Protective circuit	Short-circuit protection, overload protection of the outputs; electronic
Output voltage	24 V DC
Limitation of the voltage induced on circuit interruption	-25.8 V ... -15 V
Max. current carrying capacity per output	max. 500 mA
Maximum output current per module	max. 4 A (provide external protection)
Nominal output voltage	24 V DC
Load min.	10 kΩ
Output voltage when switched off	max. 1 V
Output current when switched off	max. 300 µA
Nominal load, inductive	max. 12 VA (1.2 H, 48 Ω, with nominal voltage)
Nominal load, lamp	max. 12 W (at nominal voltage)
Nominal load, ohmic	max. 12 W (48 Ω, with nominal voltage)

Behavior with overload	Shutdown with automatic restart
Behavior with inductive overload	Output can be destroyed
Switching frequency	max. 10000 per second (with at least 50 mA load current)
	max. 1 per second (with inductive load)
	max. 16 per second (with nominal lamp load)
Reverse voltage resistance to short pulses	limited protection up to 0.5 A for 1 s
Signal delay	max. 100 µs (when switched on)
	max. 100 µs (when switched off, with at least 50 mA load current)
Overcurrent shut-down	as of 0.7 A
Output current with ground connection interrupt when switched off	< 1 mA

Product properties

Product type	I/O component
Product family	Axioline F
Type	block modular
Mounting position	any (no temperature derating)
Scope of supply	including bus base module and Axioline F connectors
Special properties	The product is being prepared for compliance with the Cyber Resilience Act (CRA)
	Extreme conditions version

Insulation characteristics

Overvoltage category	II (IEC 60664-1, EN 60664-1)
Pollution degree	2 (IEC 60664-1, EN 60664-1)

Electrical properties

Maximum power dissipation for nominal condition	2.4 W

Potentials: Axioline F local bus supply (U_{Bus})

Supply voltage	5 V DC (via bus base module)
Current draw	max. 120 mA (up to HW 02)
	max. 60 mA (from HW 03)

Potentials: Supply for digital input and output modules (U_{IO})

Supply voltage	24 V DC
Supply voltage range	19.2 V DC ... 30 V DC (including all tolerances, including ripple)
Current draw	max. 4 A (provide external protection)
Current consumption	typ. 20 mA (without connected peripherals)
Protective circuit	Surge protection; electronic (35 V, 0.5 s)
	Reverse polarity protection; parallel diode; with external 5 A fuse (only for commissioning)
Protection	max. 8 A (polarity reversal protection up to 5 A)

Electrical isolation/isolation of the voltage ranges

Test voltage: 5 V supply of the local bus (U_{Bus}) / 24 V supply (I/Os)	500 V AC, 50 Hz, 1 min

Test voltage: 5 V supply of the local bus (U_{Bus}) / functional ground	500 V AC, 50 Hz, 1 min
Test voltage: 24 V supply (I/O) / functional ground	500 V AC, 50 Hz, 1 min

Connection data

Connection technology

Connection name	Axioline F connector
Note on the connection method	Please observe the information provided on conductor cross-sections in the “Axioline F: system and installation” user manual.

Axioline F connector

Connection method	Push-in connection
Note on the connection method	Please observe the information provided on conductor cross-sections in the “Axioline F: system and installation” user manual.
Conductor cross-section, rigid	0.2 mm² ... 1.5 mm²
Conductor cross-section, flexible	0.2 mm² ... 1.5 mm²
Conductor cross-section AWG	24 ... 16
Stripping length	8 mm

Environmental and real-life conditions

Ambient conditions

Ambient temperature (operation)	-25 °C ... 60 °C (Standard, applications with UL approval, use in zone 2 potentially explosive area)
	-40 °C ... 70 °C (Extended, see section “Tested successfully: use under extreme ambient conditions” in the data sheet.)
Degree of protection	IP20
Air pressure (operation)	70 kPa ... 106 kPa (up to 3000 m above sea level)
Air pressure (storage/transport)	70 kPa ... 106 kPa (up to 3000 m above sea level)
Ambient temperature (storage/transport)	-40 °C ... 85 °C
Permissible humidity (operation)	5 % ... 95 % (non-condensing)
Permissible humidity (storage/transport)	5 % ... 95 % (non-condensing)

Mechanical test

Vibration resistance in accordance with EN 60068-2-6/IEC 60068-2-6	5g
Shock in accordance with EN 60068-2-27/IEC 60068-2-27	30g
Continuous shock in accordance with EN 60068-2-27/IEC 60068-2-27	10g

Test (noxious gas)

Test standard	ISA-71.04-2013 G3 Harsh Group A
	IEC 60068-2-60:2015 Method 4
Temperature	25 °C ±1 K
Humidity (relative)	75 % ±3 %
Test duration	21 Days
Volume concentration H_2S (Hydrogen sulfide)	50 ppb
Volume concentration NO_2 (Nitrogen dioxide)	1250 ppb

Volume concentration Cl_2 (Chlorine)	10 ppb
Volume concentration SO_2 (Sulfur dioxide)	300 ppb

Standards and regulations

Protection class	III (IEC 61140, EN 61140, VDE 0140-1)

Approvals

ATEX

Identification	Ⓔx II 3 G Ex ec IIC T4 Gc
Certificate	UL 20 ATEX 2441X

IECEx

Identification	Ex ec IIC T4 Gc
Certificate	IECEx ULD 20.0026X

UL, USA/Canada

Identification	cULus
Certificate	E238705

UL Ex, USA / Canada

Identification	Class I, Zone 2, AEx ec IIC T4
	Class I, Division 2, Groups A, B, C, D, T4
	Ex ec IIC T4 Gc X
Certificate	E366272

CCC / China-Ex

Identification	Ex ec IIC T4 Gc
Certificate	

Drawings

Dimensional drawing

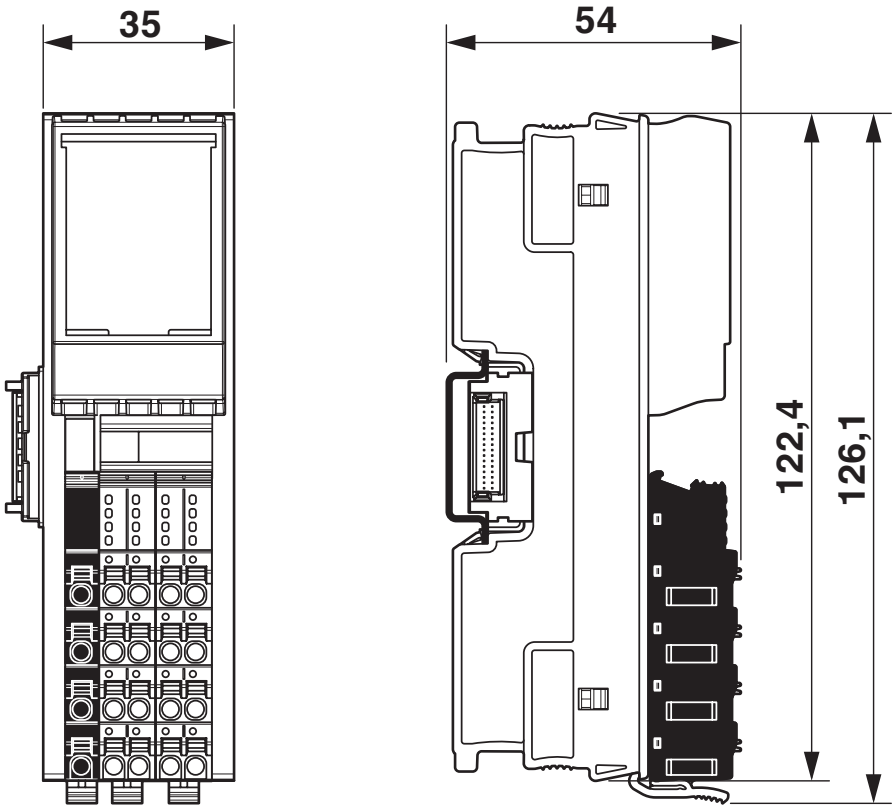

Connection diagram

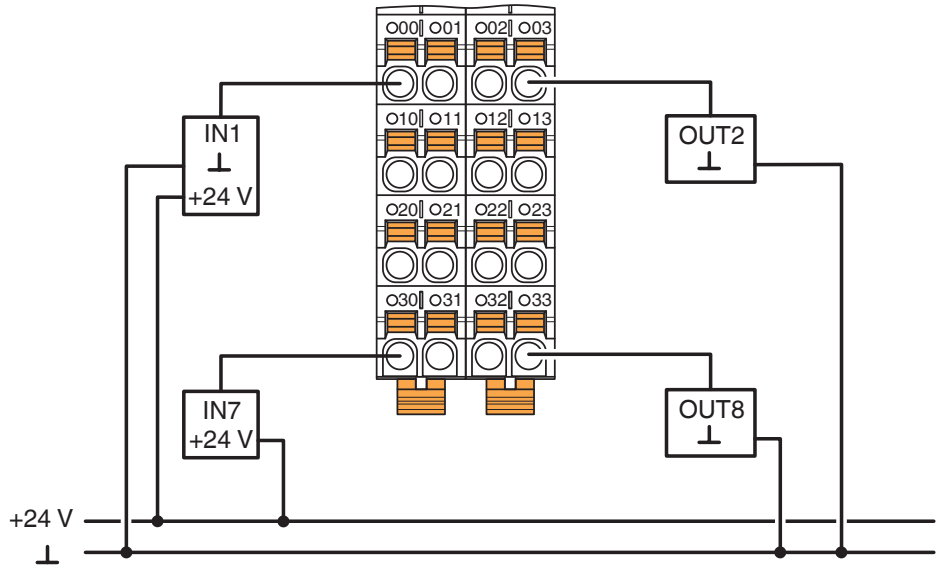

Typical connection of sensors and actuators when using external busbars

Connection diagram

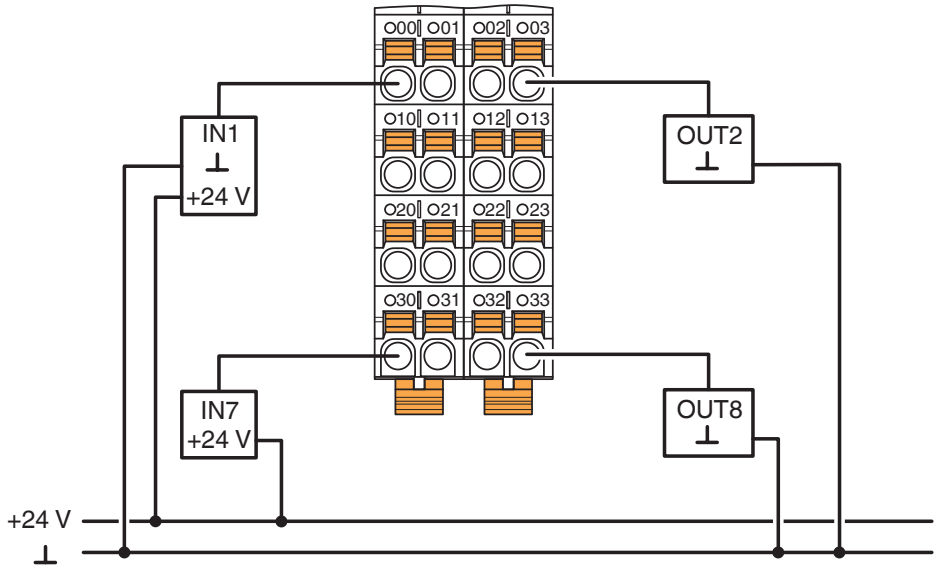

Connection in 1-conductor technology

Diagram

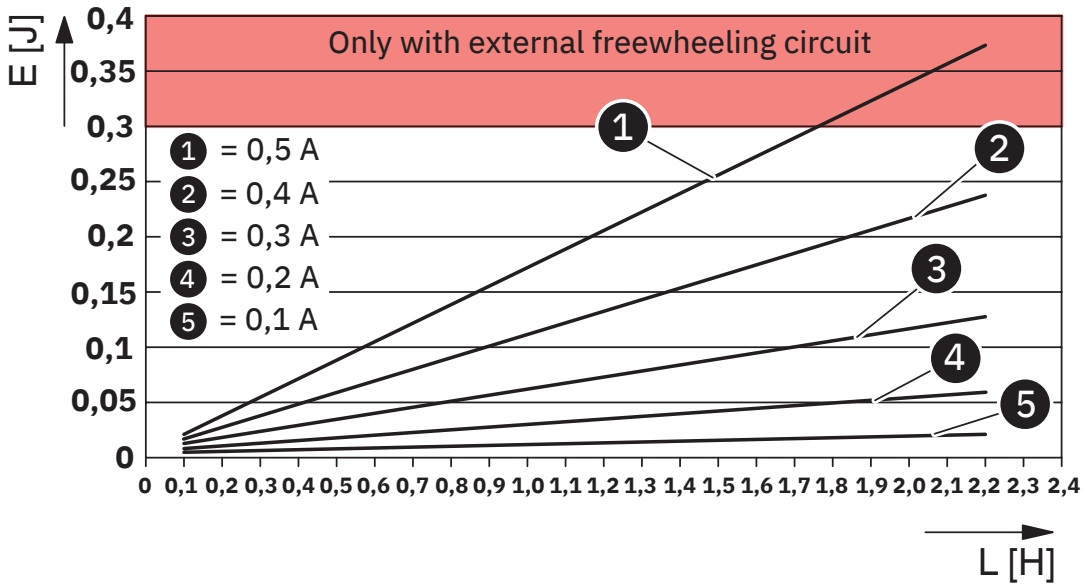

Maximum outputs power consumption when inductive loads are switched off

Block diagram

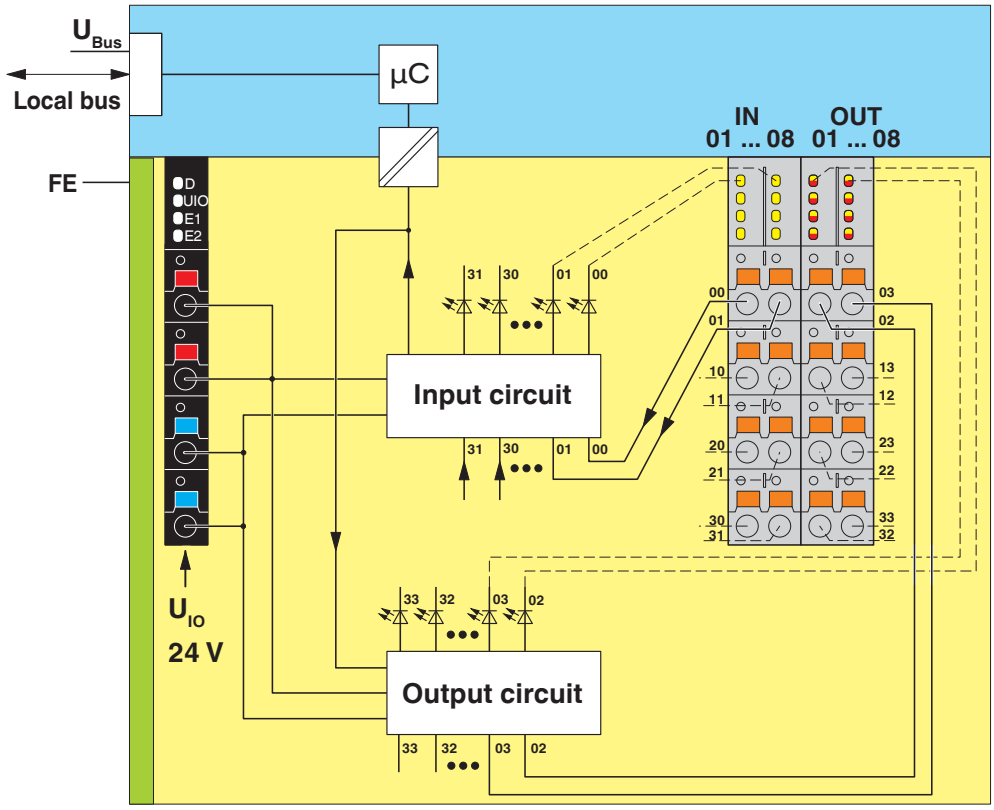

Internal wiring of the terminal points

Approvals

To download certificates, visit the product detail page: https://www.phoenixcontact.com/us/products/2702017

DNV GL
Approval ID: TAA00000DF

LR
Approval ID: LR2480202TA-02

BSH
Approval ID: 840c

cULus Listed
Approval ID: E238705

RINA
Approval ID: ELE008423XG001

IECEx
Approval ID: IECEx ULD 20.0026X

ATEX
Approval ID: UL 20 ATEX 2441X

cULus Listed
Approval ID: E366272

CCC
Approval ID: 2021122309114456

Classifications

ECLASS

ECLASS-13.0	27242604
ECLASS-15.0	27242604

ETIM

ETIM 10.0	EC001599

UNSPSC

UNSPSC 21.0	32151600

Environmental product compliance

EU RoHS

Fulfills EU RoHS substance requirements	Yes
Exemption	7(a), 7(c)-I

China RoHS

Environment friendly use period (EFUP)	EFUP-50
	An article-related China RoHS declaration table can be found in the download area for the respective article under "Manufacturer declaration". For all articles with EFUP-E, no China RoHS declaration table issued and required.

EU REACH SVHC

REACH candidate substance (CAS No.)	Lead(CAS: 7439-92-1)
SCIP	a43bae79-91a8-4a63-8888-8418d082c1b9

Phoenix Contact 2026 © - all rights reserved
https://www.phoenixcontact.com

Phoenix Contact USA
586 Fulling Mill Road
Middletown, PA 17057, United States
(+717) 944-1300
info@phoenixcon.com