AXL E EC DI8 DO8 M12 6P - Digital module

2701520

https://www.phoenixcontact.com/us/products/2701520

Please be informed that the data shown in this PDF document is generated from our online catalog. Please find the complete data in the user documentation. Our general terms of use for downloads are valid.



Axioline E, Digital I/O device, EtherCAT®, M12 connector, Digital inputs: 8, 24 V DC, connection technology: 4-conductor, Digital outputs: 8, 24 V DC, connection technology: 3-conductor, Plastic housing, degree of protection: IP65/IP67

Product description

The Axioline E device is designed for use within an EtherCAT® network. It is used to acquire and output digital signals.

Your advantages

- Connection to EtherCAT® network using M12 connectors (D-coded)
- Transmission speed of 100 Mbps
- Connection of digital sensors and actuators using M12connectors (A-coded)
- Diagnostic and status indicators
- Short-circuit and overload protection of the sensor supply
- IP65/IP67 degree of protection

ELEKTROGERÄTE RÜCKNAHME

Commercial data

Item number	2701520
Packing unit	1 pc
Minimum order quantity	1 pc
Sales key	DR04
Product key	DRI7DE
GTIN	4046356763707
Weight per piece (including packing)	558.1 g
Weight per piece (excluding packing)	480 g

Customs tariff number	85176200
Country of origin	DE

Technical data

Dimensions

Dimensional drawing	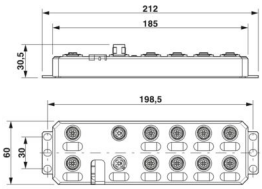
Width	60 mm
Height	185 mm
Depth	30.5 mm
Drill hole spacing	198.5 mm
Note on dimensions	The height is 212 mm including fixing clips.

Notes

Note on application

Note on application	Only for industrial use

Mounting

Mounting type	Screw mounting

Material specifications

Color (Housing)	anthracite gray (RAL 7016)
Housing material	Pocan®

Interfaces

EtherCAT®

No. of channels	2
Connection method	M12 connector
Note on the connection method	D-coded
Number of positions	4
Transmission speed	100 Mbps (with auto negotiation)

EtherCAT®

Equipment type	EtherCAT® subdevice
System-specific protocols	Mailbox protocols CANopen® over EtherCAT®
	Mailbox protocols File access over EtherCAT®
Specification	ETG.1000 V1.02

Input data

Digital:

Input name	Digital inputs

Description of the input	IEC 61131-2 types 1 and 3
Number of inputs	8
Connection method	M12 connector double occupancy
Connection technology	4-conductor
Input voltage range "0" signal	0 V DC ... 5 V DC
Input voltage range "1" signal	11 V DC ... 30 V DC
Nominal input voltage U_{IN}	24 V DC
Nominal input current at U_{IN}	typ. 3 mA
Sensor current per channel	typ. 75 mA (from U_S)
Total sensor current	max. 0.6 A (per device)
Permissible conductor length to the sensor	30 m
Input filter time	< 1000 µs
Protective circuit	Overload protection, short-circuit protection of sensor supply

Output data

Digital:

Output name	Digital outputs
Connection method	M12 connector double occupancy
Connection technology	3-conductor
Number of outputs	8
Protective circuit	Overload protection, short-circuit protection of outputs; yes
Output voltage	24 V DC
Limitation of the voltage induced on circuit interruption	-28 V ... -17 V
Maximum output current per channel	500 mA
Nominal output voltage	24 V DC (from voltage U_A)
Output voltage range	18 V DC ... 31.2 V DC
Output voltage when switched off	max. 1 V
Output current when switched off	max. 20 µA
Nominal load, inductive	12 VA (1.2 H, 48 Ω, with nominal voltage)
Nominal load, ohmic	12 W (48 Ω, with nominal voltage)
Behavior with overload	Auto restart
Switching frequency	max. 5500 per second (with at least 50 mA load current)
	max. 1 per second (with inductive load)
Reverse voltage resistance to short pulses	Reverse voltage proof
Signal delay	max. 150 µs (when switched on)
	max. 200 µs (when switched off)
Overcurrent shut-down	min. 0.7 A

Product properties

Product type	I/O component
Product family	Axioline E
Type	Stand-alone
Special properties	Plastic housing

Electrical properties

Potentials

Voltage supply U_S	24 V DC
Power supply at U_S	max. 4 A
Current consumption from U_S	typ. 8 mA
	max. 1.2 A

Supply: Module electronics and sensors

Designation	Supply of module electronics and sensors (U_S)
Connection method	M12 connector, T-coded
Number of positions	4
Supply voltage	24 V DC
Supply voltage range	18 V DC ... 31.2 V DC (including all tolerances, including ripple)
Current consumption	typ. 190 mA ±15 % (at 24 V DC)
	max. 12 A

Supply: Actuators

Designation	Supply of actuators (U_A)
Connection method	M12 connector, T-coded
Number of positions	4
Supply voltage	24 V DC
Supply voltage range	18 V DC ... 31.2 V DC (including all tolerances, including ripple)
Current consumption	typ. 30 mA ±15 % (at 24 V DC)
	max. 12 A

Electrical isolation/isolation of the voltage ranges

Test voltage: 24 V supply (communications power and sensor supply, digital inputs)/bus connection (Ethernet 1)	500 V AC, 50 Hz, 1 min
Test voltage: 24 V supply (communications power and sensor supply, digital inputs)/bus connection (Ethernet 2)	500 V AC, 50 Hz, 1 min
Test voltage: 24 V supply (communications power and sensor supply, digital inputs)/FE	500 V AC, 50 Hz, 1 min
Test voltage: Bus connection (Ethernet 1)/FE	500 V AC, 50 Hz, 1 min
Test voltage: Bus connection (Ethernet 2)/FE	500 V AC, 50 Hz, 1 min
Test voltage: Bus connection (Ethernet 1)/bus connection (Ethernet 2)	500 V AC, 50 Hz, 1 min
Test voltage: 24 V supply (actuator supply, digital outputs)/24 V supply (communications power and sensor supply, digital inputs)	500 V AC, 50 Hz, 1 min
Test voltage: 24 V supply (actuator supply, digital outputs)/bus connection (Ethernet 1)	500 V AC, 50 Hz, 1 min
Test voltage: 24 V supply (actuator supply, digital outputs)/bus connection (Ethernet 2)	500 V AC, 50 Hz, 1 min
Test voltage: 24 V supply (actuator supply, digital outputs)/FE	500 V AC, 50 Hz, 1 min

Connection data

Connection method	M12 connector

Environmental and real-life conditions

Ambient conditions

Ambient temperature (operation)	-25 °C ... 60 °C
Degree of protection	IP65/IP67
Air pressure (operation)	70 kPa ... 106 kPa (up to 3000 m above sea level)
Air pressure (storage/transport)	70 kPa ... 106 kPa (up to 3000 m above sea level)
Ambient temperature (storage/transport)	-25 °C ... 85 °C
Permissible humidity (storage/transport)	5 % ... 95 %

Mechanical test

Vibration resistance in accordance with EN 60068-2-6/IEC 60068-2-6	5g
Shock in accordance with EN 60068-2-27/IEC 60068-2-27	30g, 11 ms period, half-sine shock pulse
Continuous shock in accordance with EN 60068-2-27/IEC 60068-2-27	10g

Standards and regulations

Protection class	III (IEC 61140, EN 61140, VDE 0140-1)

Drawings

Dimensional drawing

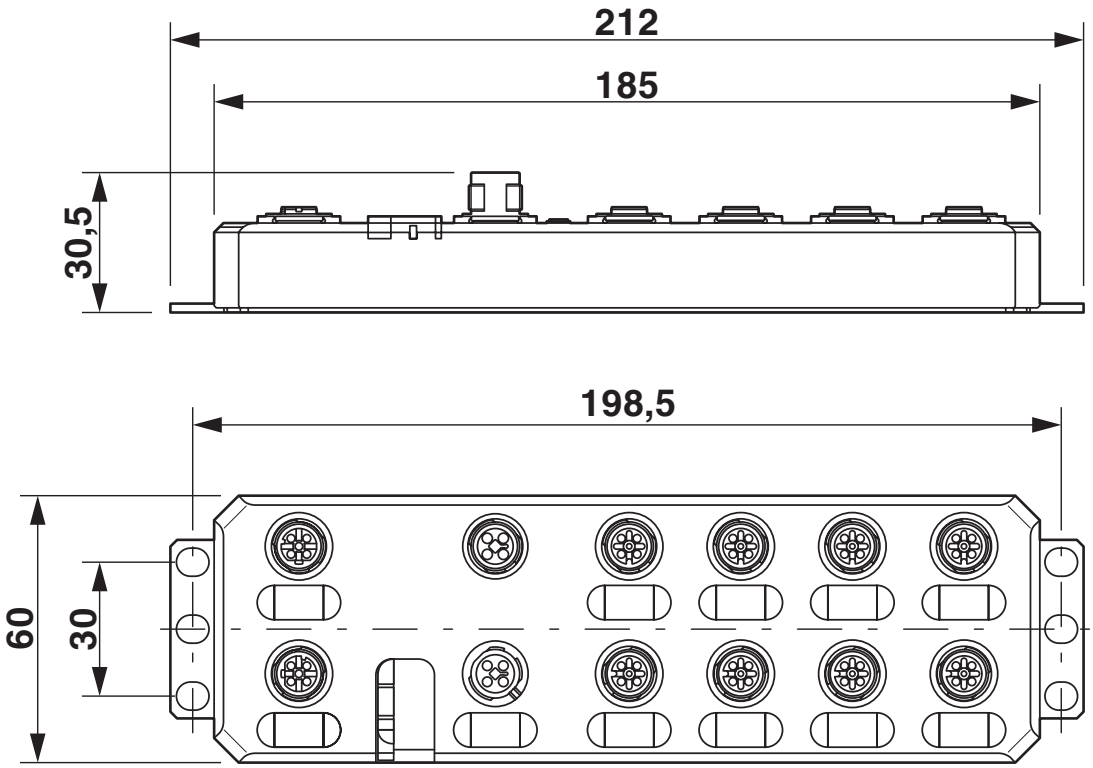

Connection diagram

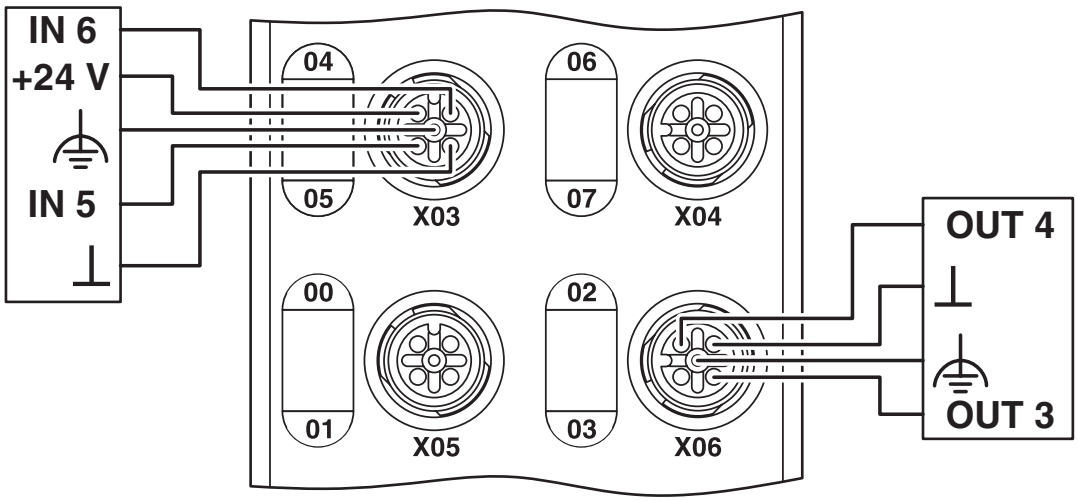

Approvals

To download certificates, visit the product detail page: https://www.phoenixcontact.com/us/products/2701520

EtherCAT
Approval ID: 0x84_001

cULus Listed
Approval ID: E140324

cULus Listed
Approval ID: E199827

Classifications

ECLASS

ECLASS-13.0	27242604
ECLASS-15.0	27242604

ETIM

ETIM 10.0	EC001599

UNSPSC

UNSPSC 21.0	32151600

Environmental product compliance

EU RoHS

Fulfills EU RoHS substance requirements	Yes
Exemption	6(c)

China RoHS

Environment friendly use period (EFUP)	EFUP-25
	An article-related China RoHS declaration table can be found in the download area for the respective article under "Manufacturer declaration". For all articles with EFUP-E, no China RoHS declaration table issued and required.

EU REACH SVHC

REACH candidate substance (CAS No.)	Lead(CAS: 7439-92-1)
SCIP	5166b2b9-cb87-4fda-880d-586e74b0062f

Phoenix Contact 2026 © - all rights reserved
https://www.phoenixcontact.com

Phoenix Contact USA
586 Fulling Mill Road
Middletown, PA 17057, United States
(+717) 944-1300
info@phoenixcon.com