AXL E PB DI16 M12 6P - Digital module

2701498

https://www.phoenixcontact.com/us/products/2701498

Please be informed that the data shown in this PDF document is generated from our online catalog. Please find the complete data in the user documentation. Our general terms of use for downloads are valid.



Axioline E, Digital input device, PROFIBUS DP, M12 connector, Digital inputs: 16, 24 V DC, connection technology: 4-conductor, Plastic housing, degree of protection: IP65/IP67

Product description

The Axioline E device is designed for use within a PROFIBUS network. It is used to acquire digital signals.

Your advantages

- Connection to PROFIBUS DP using M12 connectors (B-coded)
- Baud rate of up to 12 Mbaud (automatic baud rate detection)
- Connection of digital sensors using M12connectors (A-coded)
- Diagnostic and status indicators
- Short-circuit and overload protection of the sensor supply
- IP65/IP67 degree of protection

ELEKTROGERÄTE RÜCKNAHME

Commercial data

Item number	2701498
Packing unit	1 pc
Minimum order quantity	1 pc
Sales key	DR04
Product key	DRI7D2
GTIN	4046356763523
Weight per piece (including packing)	552.4 g
Weight per piece (excluding packing)	480 g

Customs tariff number	85176200
Country of origin	DE

Technical data

Dimensions

Dimensional drawing	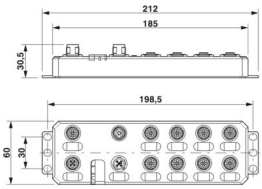
Width	60 mm
Height	185 mm
Depth	30.5 mm
Drill hole spacing	198.5 mm
Note on dimensions	The height is 212 mm including fixing clips.

Notes

Note on application

Note on application	Only for industrial use

Mounting

Mounting type	Screw mounting

Material specifications

Color (Housing)	anthracite gray (RAL 7016)
Housing material	Pocan®

Interfaces

PROFIBUS DP

No. of channels	2
Connection method	M12 connector
Note on the connection method	B-coded
Number of positions	5
Transmission speed	9.6 kbps ... 12 Mbps (Automatic baud rate detection)
Transmission physics	PROFIBUS-DP-compliant copper cable
Address area assignment	1 ... 126, adjustable

PROFIBUS DP

Equipment type	PROFIBUS slave
System-specific protocols	PROFIBUS protocols DP V1

System properties

Programming data

Input address area	16 bit

Output address area	0 bit

Input data

Digital:

Input name	Digital inputs
Description of the input	IEC 61131-2 types 1 and 3
Number of inputs	16
Cable length	max. 30 m (to the sensor)
Connection method	M12 connector double occupancy
Connection technology	4-conductor
Input voltage range "0" signal	0 V DC ... 5 V DC
Input voltage range "1" signal	11 V DC ... 30 V DC
Nominal input voltage U_{IN}	24 V DC
Nominal input current at U_{IN}	typ. 3 mA
Sensor current per channel	typ. 75 mA (from U_S)
Total sensor current	max. 1.2 A (per device)
Input filter time	< 1000 µs
Protective circuit	Overload protection, short-circuit protection of sensor supply

Product properties

Product type	I/O component
Product family	Axioline E
Type	Stand-alone
Special properties	Plastic housing

Electrical properties

Potentials

Voltage supply U_S	24 V DC
Power supply at U_S	max. 4 A
Current consumption from U_S	typ. 8 mA
	max. 1.2 A

Supply: Module electronics and sensors

Designation	Supply of module electronics and sensors (U_S)
Connection method	M12 connector, T-coded
Number of positions	4
Supply voltage	24 V DC
Supply voltage range	18 V DC ... 31.2 V DC (including all tolerances, including ripple)
Current consumption	typ. 165 mA ±15 % (at 24 V DC)
	max. 12 A

Supply: Actuators

Designation	Supply of actuators (U_A) for additional devices
Connection method	M12 connector, T-coded

Number of positions	4
Supply voltage	24 V DC
Supply voltage range	18 V DC ... 31.2 V DC (including all tolerances, including ripple)
Current consumption	typ. 3 mA ±15 % (at 24 V DC)
	max. 12 A

Electrical isolation/isolation of the voltage ranges

Test voltage: 24 V supply (communications power and sensor supply, digital inputs)/bus connection	500 V AC, 50 Hz, 1 min
Test voltage: 24 V supply (communications power and sensor supply, digital inputs)/FE	500 V AC, 50 Hz, 1 min
Test voltage: Bus connection / FE	500 V AC, 50 Hz, 1 min
Test voltage: 24 V supply (actuator supply)/24 V supply (communications power and sensor supply, digital inputs)	500 V AC, 50 Hz, 1 min
Test voltage: 24 V supply (actuator supply)/bus connection	500 V AC, 50 Hz, 1 min
Test voltage: 24 V supply (actuator supply)/FE	500 V AC, 50 Hz, 1 min

Connection data

Connection method	M12 connector

Environmental and real-life conditions

Ambient conditions

Ambient temperature (operation)	-25 °C ... 60 °C
Degree of protection	IP65/IP67
Air pressure (operation)	70 kPa ... 106 kPa (up to 3000 m above sea level)
Air pressure (storage/transport)	70 kPa ... 106 kPa (up to 3000 m above sea level)
Ambient temperature (storage/transport)	-25 °C ... 85 °C
Permissible humidity (storage/transport)	5 % ... 95 %

Mechanical test

Vibration resistance in accordance with EN 60068-2-6/IEC 60068-2-6	5g
Shock in accordance with EN 60068-2-27/IEC 60068-2-27	30g, 11 ms period, half-sine shock pulse
Continuous shock in accordance with EN 60068-2-27/IEC 60068-2-27	10g

Standards and regulations

Protection class	III (IEC 61140, EN 61140, VDE 0140-1)

Drawings

Dimensional drawing

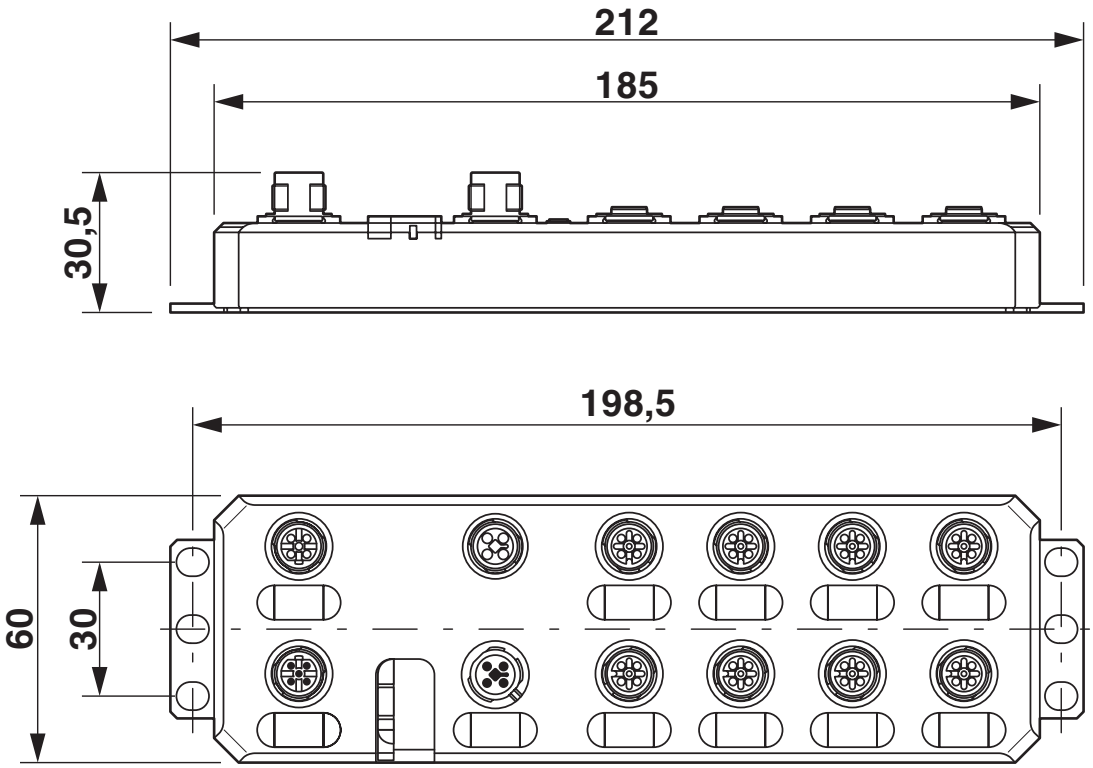

Connection diagram

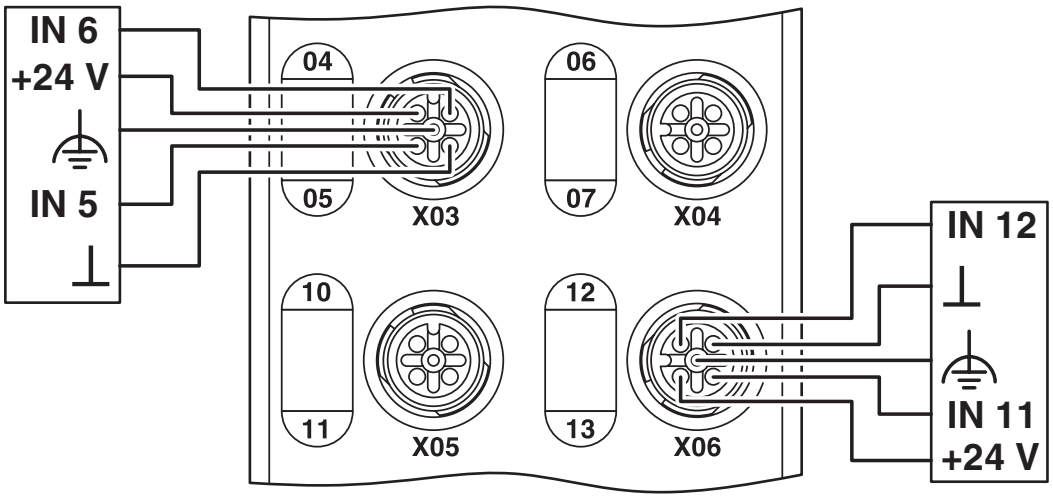

Approvals

To download certificates, visit the product detail page: https://www.phoenixcontact.com/us/products/2701498

PROFIBUS
Approval ID: Z01815

cULus Listed
Approval ID: E140324

cULus Listed
Approval ID: E199827

Classifications

ECLASS

ECLASS-13.0	27242604
ECLASS-15.0	27242604

ETIM

ETIM 10.0	EC001599

UNSPSC

UNSPSC 21.0	32151600

Environmental product compliance

EU RoHS

Fulfills EU RoHS substance requirements	Yes
Exemption	6(c)

China RoHS

Environment friendly use period (EFUP)	EFUP-25
	An article-related China RoHS declaration table can be found in the download area for the respective article under "Manufacturer declaration". For all articles with EFUP-E, no China RoHS declaration table issued and required.

EU REACH SVHC

REACH candidate substance (CAS No.)	Lead(CAS: 7439-92-1)
SCIP	55cbcafc-3c7a-4396-a923-34c8750d410c

Phoenix Contact 2026 © - all rights reserved
https://www.phoenixcontact.com

Phoenix Contact USA
586 Fulling Mill Road
Middletown, PA 17057, United States
(+717) 944-1300
info@phoenixcon.com