AXL E EIP IOL8 DI4 M12 6P - Communication module

2701496

https://www.phoenixcontact.com/us/products/2701496

Please be informed that the data shown in this PDF document is generated from our online catalog. Please find the complete data in the user documentation. Our general terms of use for downloads are valid.



Axioline E, EtherNet/IP™, M12 connector, IO-Link ports Class A: 4, connection method: M12 connector, connection technology: 3-conductor, IO-Link ports Class B: 4, connection method: M12 connector, connection technology: 3-conductor, Digital inputs at pin 2 for class A ports: 4, 24 V DC, connection technology: 3-conductor, Plastic housing, degree of protection: IP65/IP67

Product description

The Axioline E EtherNet/IP™ IO-Link master is designed for use within an EtherNet/IP™ network. It enables the operation of up to eight IO-Link sensors/actuators and is also used to acquire digital signals.

Your advantages

- Connection to EtherNet/IP™ network using M12 connectors (D-coded)
- Transmission speed of 10 Mbps and 100 Mbps
- Connection of four IO-Link devices with additional digital input
- Connection of four IO-Link actuators with additional power supply
- Connection of IO-Link ports using M12connectors (A-coded, 5-pos.)
- IO-Link specification V1.1.2
- Diagnostic and status indicators
- Short-circuit and overload protection of the sensor supply
- IP65/IP67 degree of protection

ELEKTROGERÄTE RÜCKNAHME

Commercial data

Item number	2701496
Packing unit	1 pc
Minimum order quantity	1 pc
Sales key	DR04

Product key	DRI7DD
GTIN	4046356763509
Weight per piece (including packing)	556.776 g
Weight per piece (excluding packing)	552.8 g
Customs tariff number	85176200
Country of origin	DE

Technical data

Dimensions

Dimensional drawing	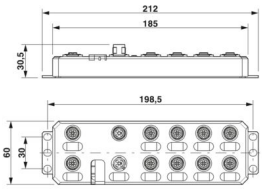
Width	60 mm
Height	185 mm
Depth	30.5 mm
Drill hole spacing	198.5 mm
Note on dimensions	The height is 212 mm including fixing clips.

Notes

Note on application

Note on application	Only for industrial use

Mounting

Mounting type	Screw mounting

Material specifications

Color (Housing)	anthracite gray (RAL 7016)
Housing material	Pocan®

Interfaces

EtherNet/IP™

Number of interfaces	2
Connection method	M12 connector
Note on the connection method	D-coded
Number of positions	4
Transmission speed	10/100 Mbps (with auto negotiation)

EtherNet/IP™

Equipment type	EtherNet/IP™ device
System-specific protocols	EtherNet/IP™ protocols ACD
	EtherNet/IP™ protocols DLR
	EtherNet/IP™ protocols IGMP v2
Protocols supported	SNMP v1
	HTTP
	TFTP
	FTP

	BootP
	DHCP
Specification	CIP Edition 3.11 EIP adaptation of CIP 1.12

Input data

Digital:

Input name	Digital inputs at pin 2 for class A ports
Description of the input	IEC 61131-2 type 1
Number of inputs	4
Connection method	M12 connector, X01 ... X04 have double occupancy
Connection technology	3-conductor
Input voltage range "0" signal	-0.3 V DC ... 5 V DC
Input voltage range "1" signal	15 V DC ... 30 V DC
Nominal input voltage U_{IN}	24 V DC
Nominal input current at U_{IN}	typ. 3 mA
Sensor current per channel	max. 200 mA (from L+/L-)
Total sensor current	max. 1.6 A (from L+/L-)
Input frequency	0.5 kHz
Input filter time	< 1000 µs
Protective circuit	Overload protection, short-circuit protection of sensor supply

Digital

Description of the input	IO-Link ports in digital input (DI) mode
Number of inputs	max. 8 (IEC 61131-2 type 1)
Connection method	M12 connector, X01 ... X04 have double occupancy
Connection technology	3-conductor
Nominal input voltage U_{IN}	24 V DC
Input voltage range "0" signal	-0.3 V DC ... 5 V DC
Input voltage range "1" signal	15 V DC ... 30 V DC
Nominal input current	typ. 3 mA
Sensor current per channel	max. 200 mA (from L+/L-)
Total sensor current	max. 1.6 A (from L+/L-)
Input filter time	< 1000 µs
Input frequency	0.5 kHz
Protective circuit	Overload protection; yes
	Short-circuit protection for the sensor supply; yes

IO-Link

Number of ports	4
Connection method	M12 connector
Connection technology	3-conductor
Port type	Class A

Cycle Time	min. 2 ms (MasterCycleTime: PDInput* + PDOutput* + OnReqData* < = 17 Bytes, COM3; * see "IO-Link Interface and System Specification V1.1.2")

IO-Link

Number of ports	4
Connection method	M12 connector
Connection technology	3-conductor
Port type	Class B
Cycle Time	min. 2 ms (MasterCycleTime: PDInput* + PDOutput* + OnReqData* < = 17 Bytes, COM3; * see "IO-Link Interface and System Specification V1.1.2")

Output data

Digital

Output description	IO-Link ports in digital output (DO) mode
Connection method	M12 connector, X01 ... X04 have double occupancy
Connection technology	3-conductor
Number of outputs	max. 8
Nominal output voltage	24 V DC
Maximum output current per channel	150 mA
Maximum output current per module	1.2 A
Nominal load, ohmic	3.6 W (160 Ω, at nominal load)
Nominal load, inductive	3.6 VA (0.8 H, 160 Ω, at nominal load)
Signal delay	max. 150 µs (when switched on)
	max. 200 µs (when switched off)
Switching rate	1 per second, maximum (at nominal inductive load)
	5500 per second, maximum (at nominal ohmic load)
Limitation of the voltage induced on circuit interruption	-15 V DC
Output voltage when switched off	max. 1 V
Output current when switched off	max. 300 µA
Protective circuit	Overload protection; yes
	Short-circuit protection; yes
Behavior with overload	Shutdown with automatic restart

Product properties

Product type	I/O component
Product family	Axioline E
Type	Stand-alone
Special properties	Plastic housing

Electrical properties

Potentials

Voltage supply U_S	24 V DC
Power supply at U_S	max. 4 A

Current consumption from U_S	typ. 8 mA
	max. 1.2 A

Supply: IO-Link

Nominal voltage for I/O supply	24 V DC
Nominal current for every IO-Link port	max. 150 mA (at C/Q (pin 4), maximum of 1.6 A over all 8 IO-Link C/Q and L+ cables)
	max. 200 mA (at L+/L- (pin 1 and pin 3), during startup, up to 1.6 A for short periods)
	max. 2 A (at U_A (IO-Link B ports, pin 2 and pin 5))
Permissible cable length	< 20 m (to the sensor)
Protective circuit	Overload protection; yes

Supply: Module electronics and sensors

Designation	Supply of module electronics and sensors (U_S)
Connection method	M12 connector, T-coded
Number of positions	4
Supply voltage	24 V DC
Supply voltage range	19.5 V DC ... 31.2 V DC (including all tolerances, including ripple)
Current consumption	typ. 180 mA ±15 % (at 24 V DC)
	max. 12 A

Supply: Actuators

Designation	Supply of actuators (U_A)
Connection method	M12 connector, T-coded
Number of positions	4
Supply voltage	24 V DC
Supply voltage range	18 V DC ... 31.2 V DC (including all tolerances, including ripple)
Current consumption	typ. 28 mA ±15 % (at 24 V DC)
	max. 12 A

Electrical isolation/isolation of the voltage ranges

Test voltage: 24 V supply (communications power and sensor supply, IO-Link ports)/bus connection (Ethernet 1)	500 V AC, 50 Hz, 1 min
Test voltage: 24 V supply (communications power and sensor supply, IO-Link ports)/bus connection (Ethernet 2)	500 V AC, 50 Hz, 1 min
Test voltage: 24 V supply (communications power and sensor supply, IO-Link ports)/FE	500 V AC, 50 Hz, 1 min
Test voltage: Bus connection (Ethernet 1)/FE	500 V AC, 50 Hz, 1 min
Test voltage: Bus connection (Ethernet 2)/FE	500 V AC, 50 Hz, 1 min
Test voltage: Bus connection (Ethernet 1)/bus connection (Ethernet 2)	500 V AC, 50 Hz, 1 min
Test voltage: 24 V supply (actuator supply)/24 V supply (communications power and sensor supply, IO-Link ports)	500 V AC, 50 Hz, 1 min
Test voltage: 24 V supply (actuator supply)/bus connection (Ethernet 1)	500 V AC, 50 Hz, 1 min
Test voltage: 24 V supply (actuator supply)/bus connection (Ethernet 2)	500 V AC, 50 Hz, 1 min

Test voltage: 24 V supply (actuator supply)/FE	500 V AC, 50 Hz, 1 min

Connection data

Connection method	M12 connector

Environmental and real-life conditions

Ambient conditions

Ambient temperature (operation)	-25 °C ... 60 °C
Degree of protection	IP65/IP67
Air pressure (operation)	70 kPa ... 106 kPa (up to 3000 m above sea level)
Air pressure (storage/transport)	70 kPa ... 106 kPa (up to 3000 m above sea level)
Ambient temperature (storage/transport)	-25 °C ... 85 °C
Permissible humidity (storage/transport)	5 % ... 95 %

Mechanical test

Vibration resistance in accordance with EN 60068-2-6/IEC 60068-2-6	5g
Shock in accordance with EN 60068-2-27/IEC 60068-2-27	30g, 11 ms period, half-sine shock pulse
Continuous shock in accordance with EN 60068-2-27/IEC 60068-2-27	10g

Standards and regulations

Protection class	III (IEC 61140, EN 61140, VDE 0140-1)

Drawings

Dimensional drawing

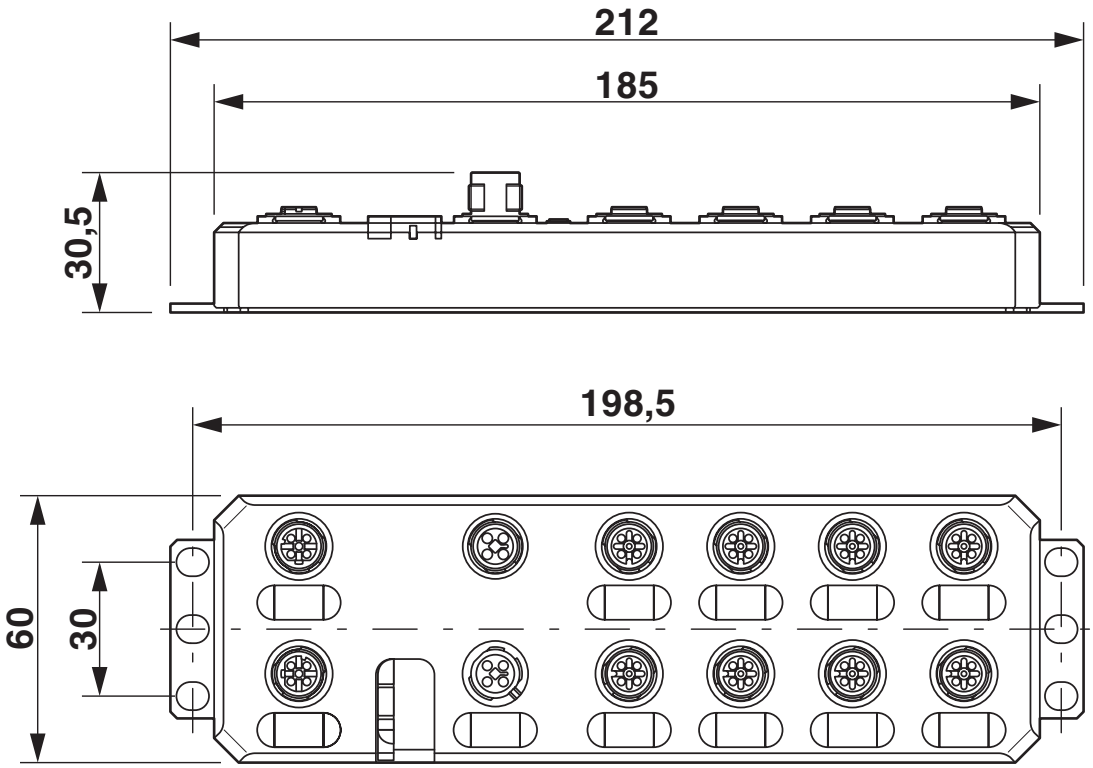

Connection diagram

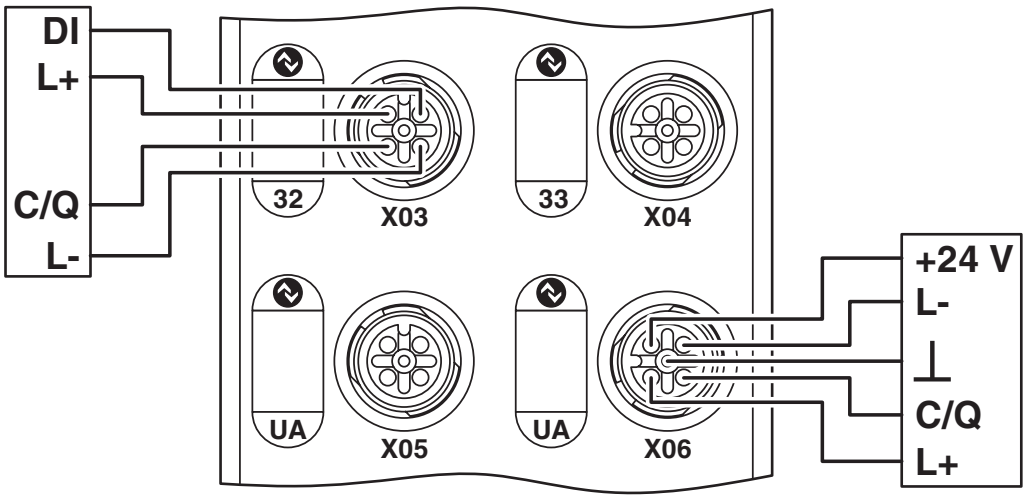

Connection diagram

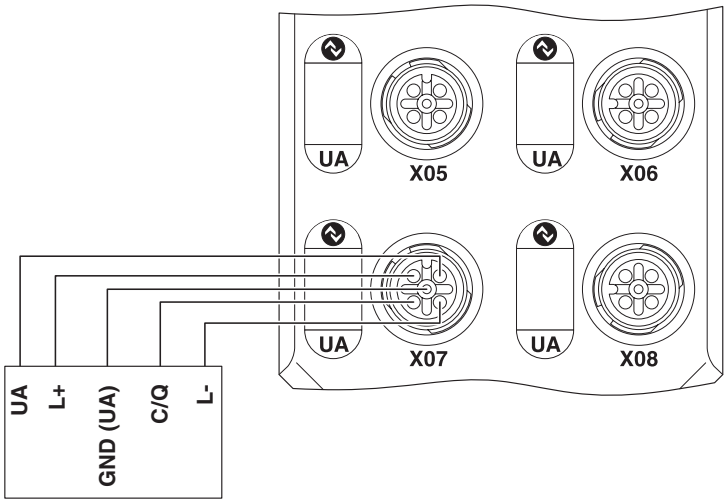

Approvals

To download certificates, visit the product detail page: https://www.phoenixcontact.com/us/products/2701496

cULus Listed
Approval ID: E140324

cULus Listed
Approval ID: E199827

Classifications

ECLASS

ECLASS-13.0	27242604
ECLASS-15.0	27242604

ETIM

ETIM 10.0	EC001599

UNSPSC

UNSPSC 21.0	32151600

Environmental product compliance

EU RoHS

Fulfills EU RoHS substance requirements	Yes
Exemption	6(c)

China RoHS

Environment friendly use period (EFUP)	EFUP-25
	An article-related China RoHS declaration table can be found in the download area for the respective article under "Manufacturer declaration". For all articles with EFUP-E, no China RoHS declaration table issued and required.

EU REACH SVHC

REACH candidate substance (CAS No.)	Lead(CAS: 7439-92-1)
SCIP	b9a5978d-fc0e-40fa-9d58-bc0c4fcce2ae

Phoenix Contact 2026 © - all rights reserved
https://www.phoenixcontact.com

Phoenix Contact USA
586 Fulling Mill Road
Middletown, PA 17057, United States
(+717) 944-1300
info@phoenixcon.com