IB IL AO 2/UI-XC-PAC - Analog module

2701389

https://www.phoenixcontact.com/us/products/2701389

Please be informed that the data shown in this PDF document is generated from our online catalog. Please find the complete data in the user documentation. Our general terms of use for downloads are valid.

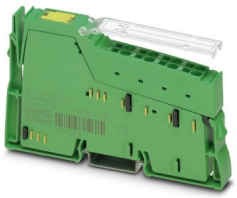

The figure shows the standard item

Inline, Analog output terminal, Analog outputs: 2, 0 V ... 10 V, -10 V ... 10 V, 0 mA ... 20 mA, 4 mA ... 20 mA, -20 mA ... 20 mA, connection technology: 2-conductor, transmission speed in the local bus: 500 kbps, Extreme conditions version, degree of protection: IP20, including Inline connector and labeling field

Product description

The terminal is designed for use within an Inline station. It is used to output analog current and voltage signals. Thanks to special engineering measures and tests, the terminal can be used under extreme ambient conditions.

Your advantages

- 2 analog output channels
- Connection of actuators in 2-conductor technology
- Current ranges: 0 mA ... 20 mA, 4 mA ... 20 mA, ±20 mA
- Voltage ranges: 0 V ... 10 V, ±10 V
- Can be used under extreme ambient conditions
- Extended temperature range of -40 °C ... +70 °C (see “Tested successfully: use under extreme ambient conditions” in the data sheet)
- Coated PCBs

ELEKTROGERÄTE RÜCKNAHME

Commercial data

Item number	2701389
Packing unit	1 pc
Minimum order quantity	1 pc
Sales key	DR01
Product key	DRI142

GTIN	4046356743693
Weight per piece (including packing)	90.7 g
Weight per piece (excluding packing)	66 g
Customs tariff number	85389091
Country of origin	DE

Technical data

Dimensions

Dimensional drawing	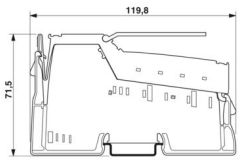
Width	12.2 mm
Height	119.8 mm
Depth	71.5 mm
Note on dimensions	Housing dimensions

Notes

Note on application

Note on application	Only for industrial use

Mounting

Mounting type	DIN rail mounting

Material specifications

Color (Housing)	green (RAL 6021)

Interfaces

Inline local bus

Number of interfaces	2
Connection method	Inline data jumper
Transmission speed	500 kbps
Transmission physics	Copper

System properties

Programming data

Length code (hex)	04
ID code (dec.)	91
Length code (dec)	04
Process data channel	64 bit
Input address area	8 Byte
Output address area	8 Byte
Parameter channel (PCP)	0 Byte
Register length (bus)	64 bit

Fieldbus data telegram

Required parameter data	10 Byte
Required configuration data	5 Byte

Output data

Analog:

Output name	Analog outputs
Connection technology	2-conductor
Note regarding the connection technology	shielded
Number of outputs	2
D/A conversion time	typ. 10 µs
D/A converter resolution	12 bit
Protective circuit	Short-circuit and overload protection; Electronic
	Transient protection; Suppressor diode
Data formats	IB IL, S7-compatible
Representation of output values	12 bits (11 bits + sign bit)
Process data update	bus-synchronous
Current output signal	0 mA ... 20 mA
	4 mA ... 20 mA
	-20 mA ... 20 mA
Load/output load current output	≤ 450 Ω
Voltage output signal	0 V ... 10 V
	-10 V ... 10 V
Load/output load voltage output	> 1 kΩ
Permissible cable length	max. 250 m (The specifications refer to nominal operation after complying with installation instructions. The specifications refer to the following reference cable type: Shielded power station cable: LiYCY; 2 x 2 x 0,5 mm²; VDE0812)
Tolerance, relative	typ. 0.1 % (of output range final value)

Product properties

Product type	I/O component
Product family	Inline
Type	modular
Scope of supply	including Inline connector and labeling field
Special properties	Extreme conditions version
Diagnostics messages	Failure of the internal I/O supply I/O error message sent to the bus coupler
	I/O supply failure Message in the diagnostic code (in the IB IL format)
	Short circuit/overload of the outputs Message in the diagnostic code (in the IB IL format)
	Configuration invalid Message in the diagnostic code (in the IB IL format)

Insulation characteristics

Overvoltage category	II (IEC 60664-1, EN 60664-1)
Pollution degree	2 (IEC 60664-1, EN 60664-1)

Electrical properties

Potentials: Communications power (U_L)

Supply voltage	7.5 V DC (via voltage jumper)
Current draw	max. 65 mA
	typ. 55 mA

Potentials: Supply of analog modules (U_{ANA})

Supply voltage	24 V DC (via voltage jumper)
Supply voltage range	19.2 V DC ... 30 V DC (including all tolerances, including ripple)
Current draw	max. 75 mA (Nominal current load ($I_{OUT1/2}$ = 20 mA, R_L = 0 Ω))
	max. 30 mA (No-load)
	typ. 38 mA (Nominal voltage load ($U_{OUT1/2}$ = 10 V, R_L = 1 kΩ))
	max. 45 mA (Nominal voltage load ($U_{OUT1/2}$ = 10 V, R_L = 1 kΩ))
	typ. 65 mA (Nominal current load ($I_{OUT1/2}$ = 20 mA, R_L = 0 Ω))
	typ. 24 mA (No-load)

Electrical isolation/isolation of the voltage ranges

Test voltage: 7.5 V supply (bus logics)/24 V analog supply (analog I/O)	500 V AC, 50 Hz, 1 min
Test voltage: 7.5 V supply (bus logic)/functional ground	500 V AC, 50 Hz, 1 min
Test voltage: 24 V analog supply (analog I/O)/functional ground	500 V AC, 50 Hz, 1 min

Connection data

Connection technology

Connection name	Inline connector

Inline connector

Connection method	Spring-cage connection
Conductor cross-section, rigid	0.08 mm² ... 1.5 mm²
Conductor cross-section, flexible	0.08 mm² ... 1.5 mm²
Conductor cross-section AWG	28 ... 16
Stripping length	8 mm

Environmental and real-life conditions

Ambient conditions

Ambient temperature (operation)	-25 °C ... 55 °C (Standard)
	-40 °C ... 70 °C (Extended, see section “Tested successfully: use under extreme ambient conditions” in the data sheet.)
Degree of protection	IP20
Air pressure (operation)	70 kPa ... 106 kPa (up to 3000 m above sea level)
Air pressure (storage/transport)	70 kPa ... 106 kPa (up to 3000 m above sea level)
Ambient temperature (storage/transport)	-40 °C ... 85 °C

Permissible humidity (operation)	10 % ... 95 % (non-condensing)
Permissible humidity (storage/transport)	10 % ... 95 % (non-condensing)

Standards and regulations

Protection class	III (IEC 61140, EN 61140, VDE 0140-1)

Drawings

Dimensional drawing

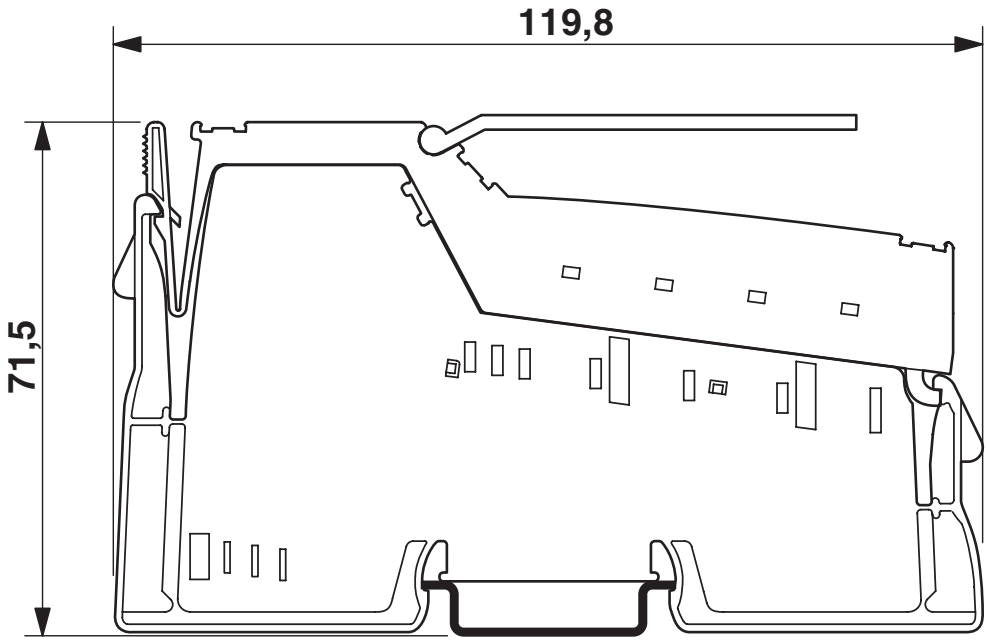

Connection diagram

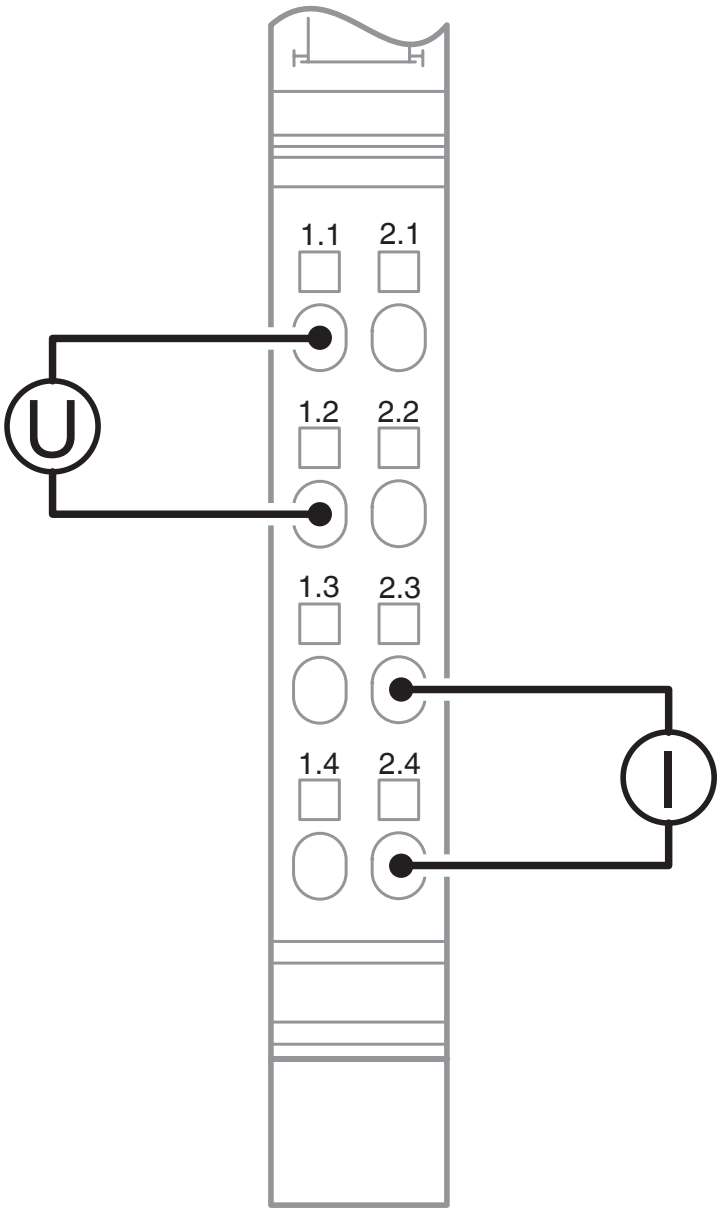

Approvals

To download certificates, visit the product detail page: https://www.phoenixcontact.com/us/products/2701389

cULus Listed
Approval ID: E140324

Classifications

ECLASS

ECLASS-13.0	27242601
ECLASS-15.0	27242601

ETIM

ETIM 10.0	EC001596

UNSPSC

UNSPSC 21.0	32151600

Environmental product compliance

EU RoHS

Fulfills EU RoHS substance requirements	Yes
Exemption	7(a), 7(c)-I

China RoHS

Environment friendly use period (EFUP)	EFUP-50
	An article-related China RoHS declaration table can be found in the download area for the respective article under "Manufacturer declaration". For all articles with EFUP-E, no China RoHS declaration table issued and required.

EU REACH SVHC

REACH candidate substance (CAS No.)	Lead(CAS: 7439-92-1)
SCIP	b3d385b1-50ff-4804-99db-9d596cd06707

Phoenix Contact 2026 © - all rights reserved
https://www.phoenixcontact.com

Phoenix Contact USA
586 Fulling Mill Road
Middletown, PA 17057, United States
(+717) 944-1300
info@phoenixcon.com