RAD-ISM-2400-ANT-OMNI-2-1-RSMA - Antenna

2701362

https://www.phoenixcontact.com/us/products/2701362

Please be informed that the data shown in this PDF document is generated from our online catalog. Please find the complete data in the user documentation. Our general terms of use for downloads are valid.



Omnidirectional antenna for panel mounting, frequency band: 2.4 GHz, gain: 2 dBi, degree of protection: IP65, connection: RSMA (male), incl. 1.5 m connecting cable, mounting bracket, and mounting material

Your advantages

- Ideally suited for freely mobile or stationary 2.4 GHz applications
- Including 1.5 m connecting cable

Commercial data

Item number	2701362
Packing unit	1 pc
Minimum order quantity	1 pc
Sales key	DN23
Product key	DNN2Z1
GTIN	4046356743471
Weight per piece (including packing)	96 g
Weight per piece (excluding packing)	70 g
Customs tariff number	85177100
Country of origin	TW

Technical data

Notes

Note on application

Note on application	Only for industrial use

Product properties

Product type	Antenna
Radiation characteristics	Omnidirectional
Gain	2 dBi
Vertical beamwidth	75 °
Horizontal beamwidth	360 °
Polarization	Linear vertical

Electrical properties

Frequency band	2.4 GHz
Frequency range	2.4 GHz ... 2.5 GHz
Impedance	50 Ω
Maximum capacity	1.00 W
Voltage standing wave ratio VSWR in a 50 Ω system	≤ 2.00

Connection data

Connection technology

Connection method	RSMA (male)

Dimensions

Height	82.5 mm
Diameter	7.8 mm

Material specifications

Color	black (RAL 9005)
Material (Radom)	Polyurethane
Material (Antenna base)	Polycarbonate
Material (Holder)	Stainless steel V2A
Outer sheath, material	Fluorinated ethylene propylene (FEP)

Cable/line

Cable length	1.50 m
Connecting cable	yes
External cable diameter	2.50 mm
Outer sheath, material	Fluorinated ethylene propylene (FEP)
Smallest bending radius, fixed installation	25.4 mm

Environmental and real-life conditions

Ambient conditions

Degree of protection	IP65
Ambient temperature (operation)	-20 °C ... 65 °C
Ambient temperature (storage/transport)	-30 °C ... 75 °C

Mounting

Mounting type	Panel mounting
Assembly note	Outdoors and indoors

Drawings

Schematic diagram

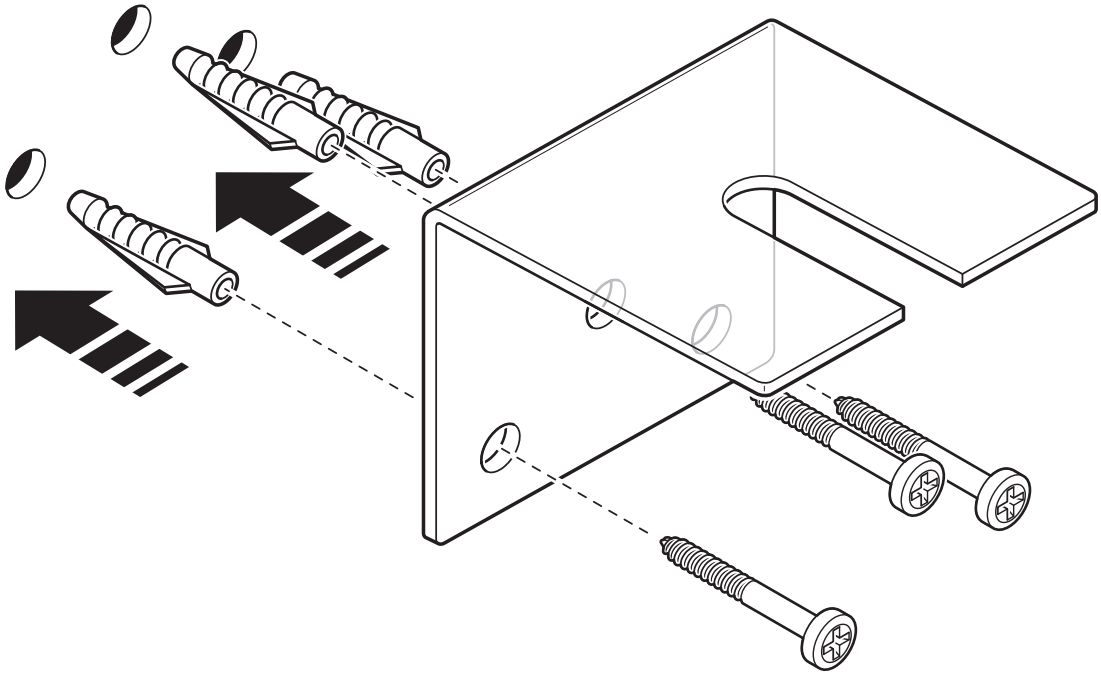

Panel mounting

Schematic diagram

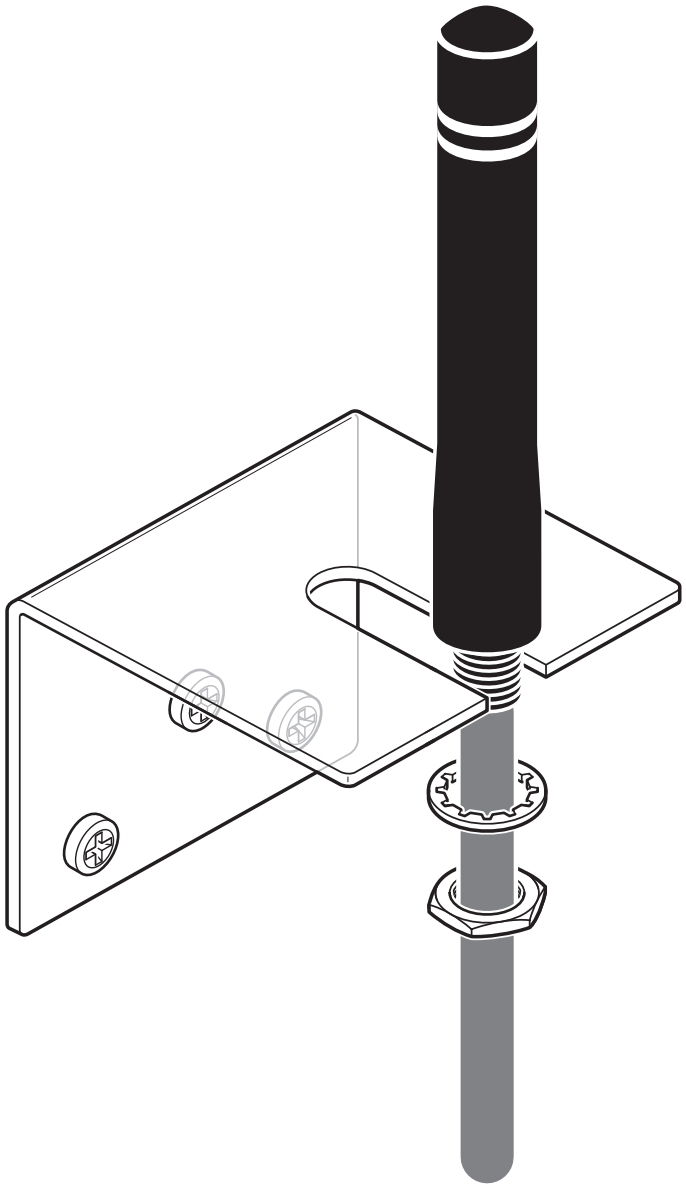

Panel mounting

Schematic diagram

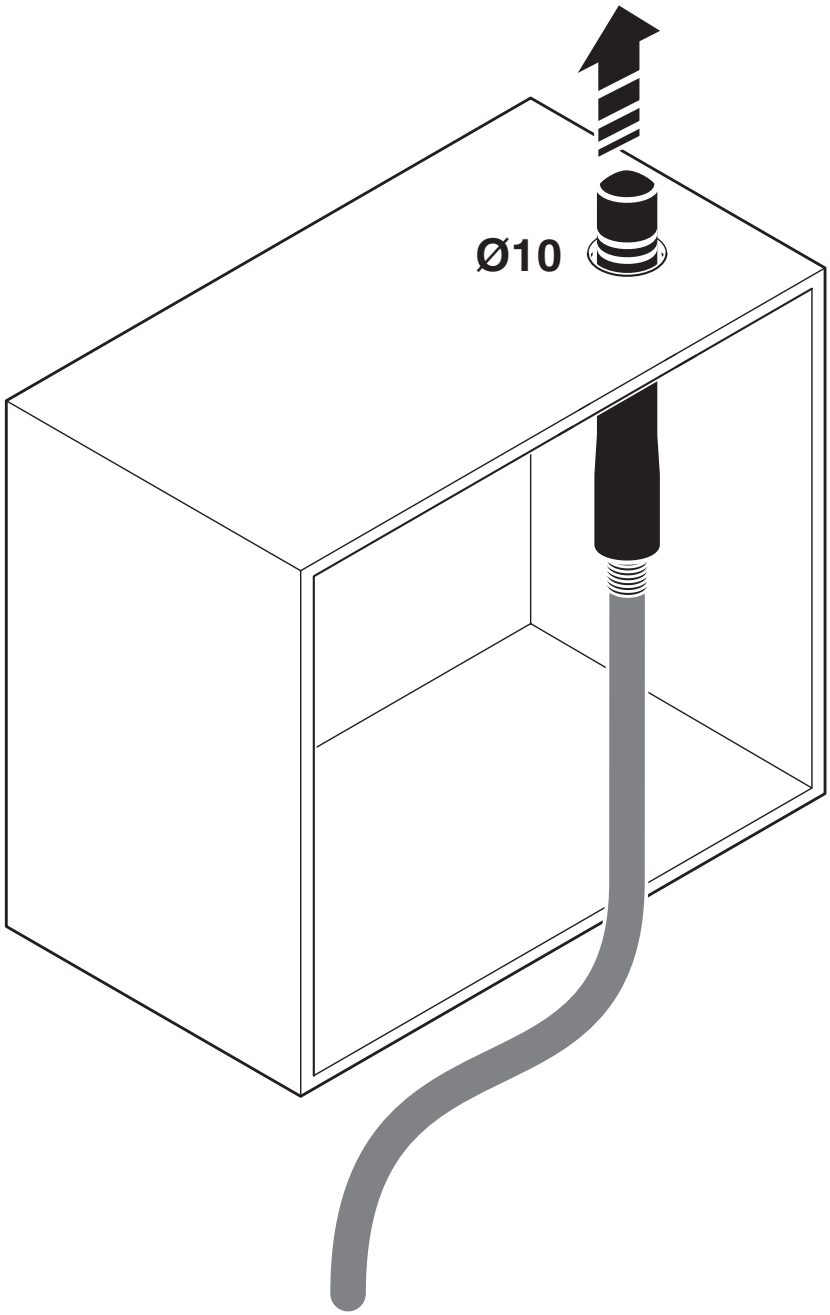

Control cabinet feed-through

Schematic diagram

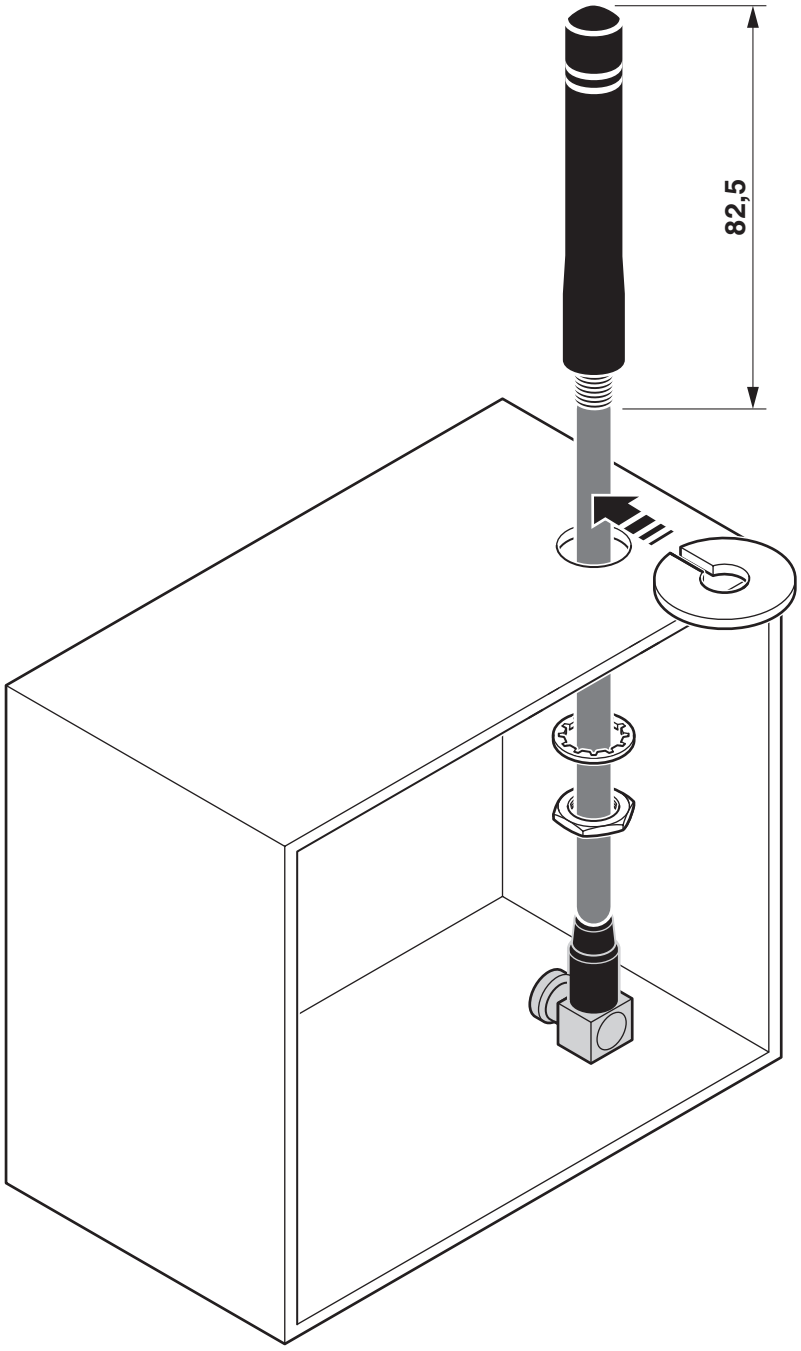

Mounting on the control cabinet

Schematic diagram

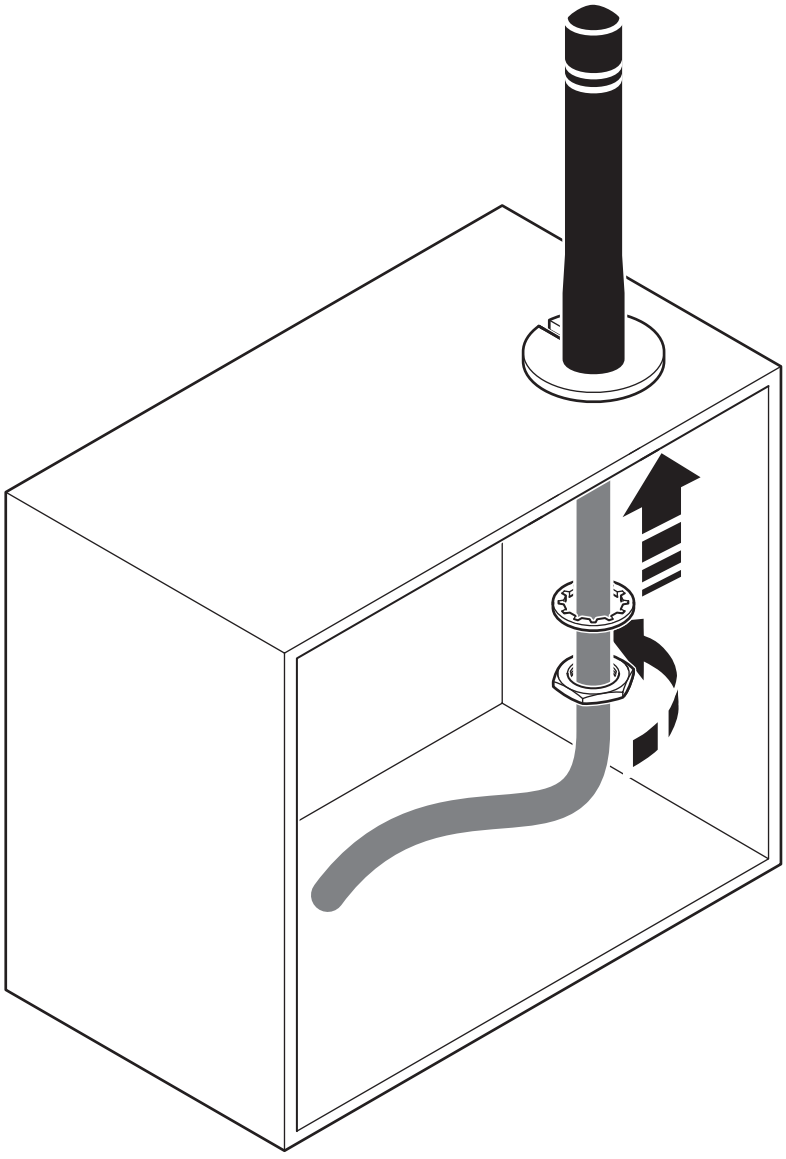

Mounting on the control cabinet

Schematic diagram

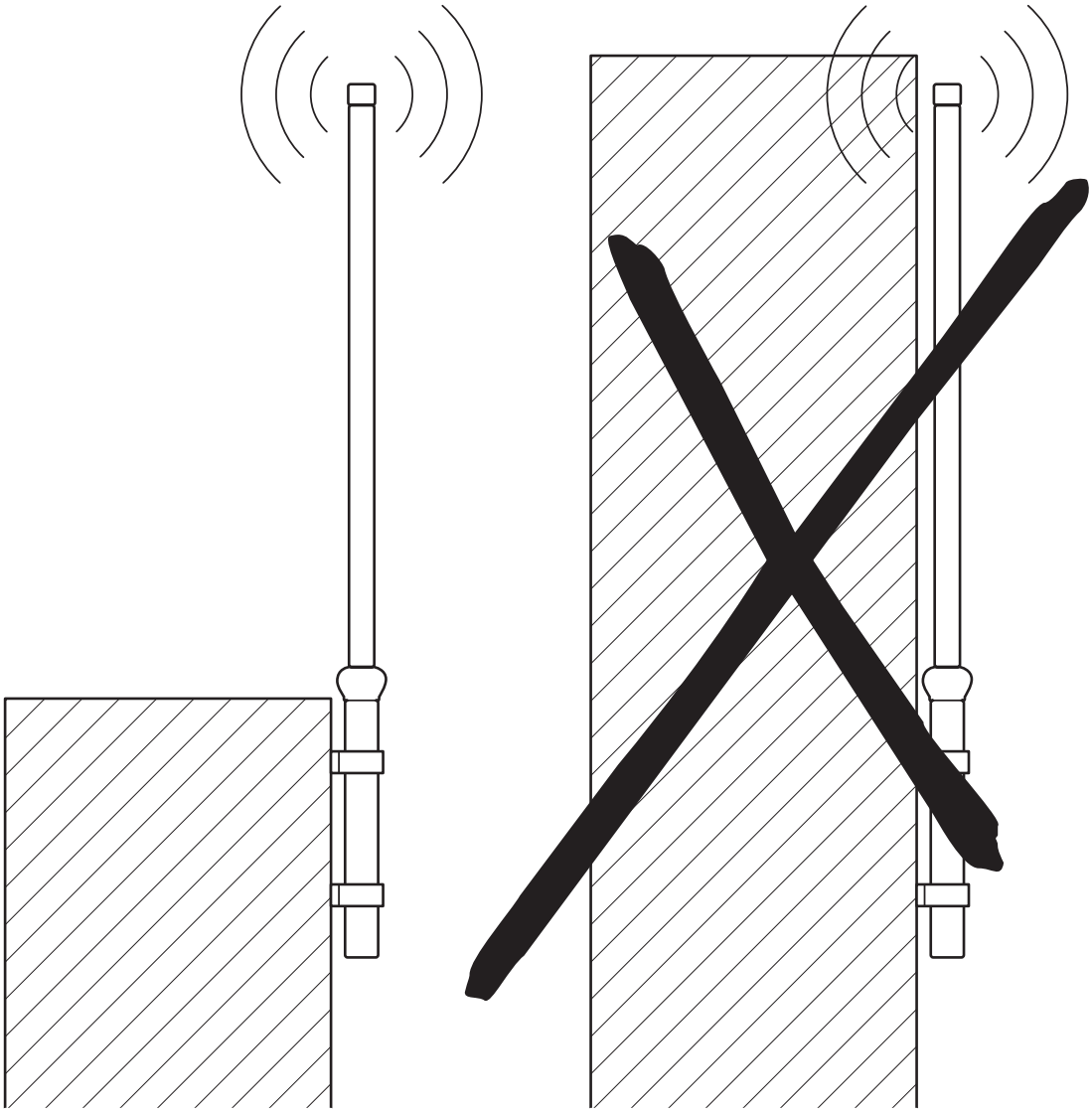

Schematic diagram

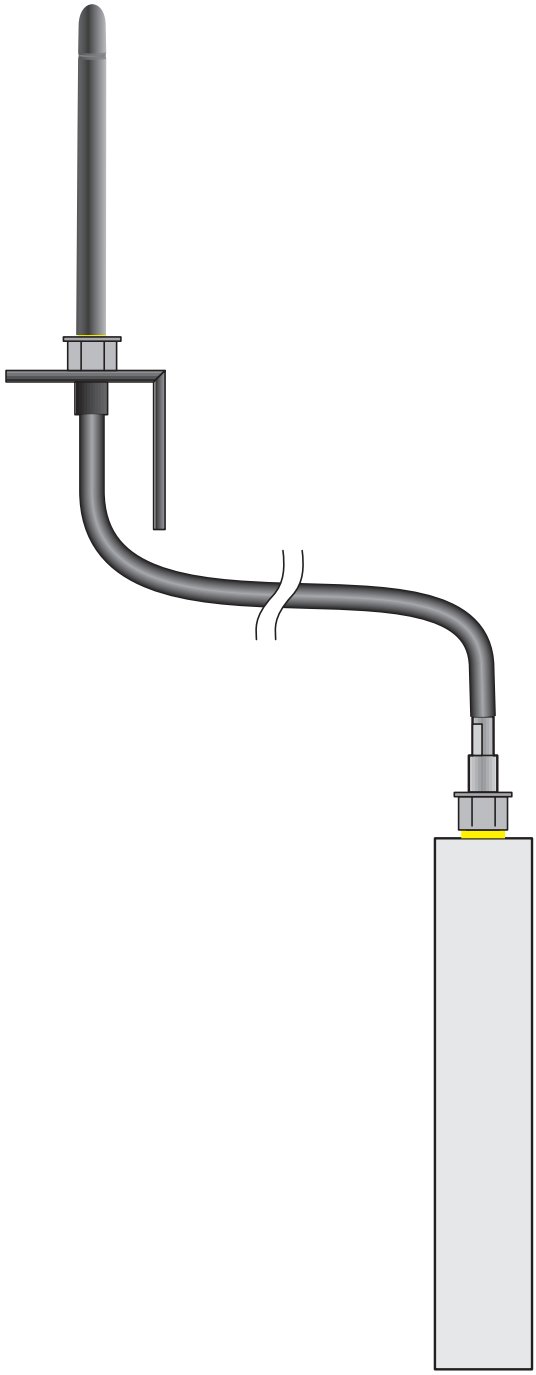

Installation example

Diagram

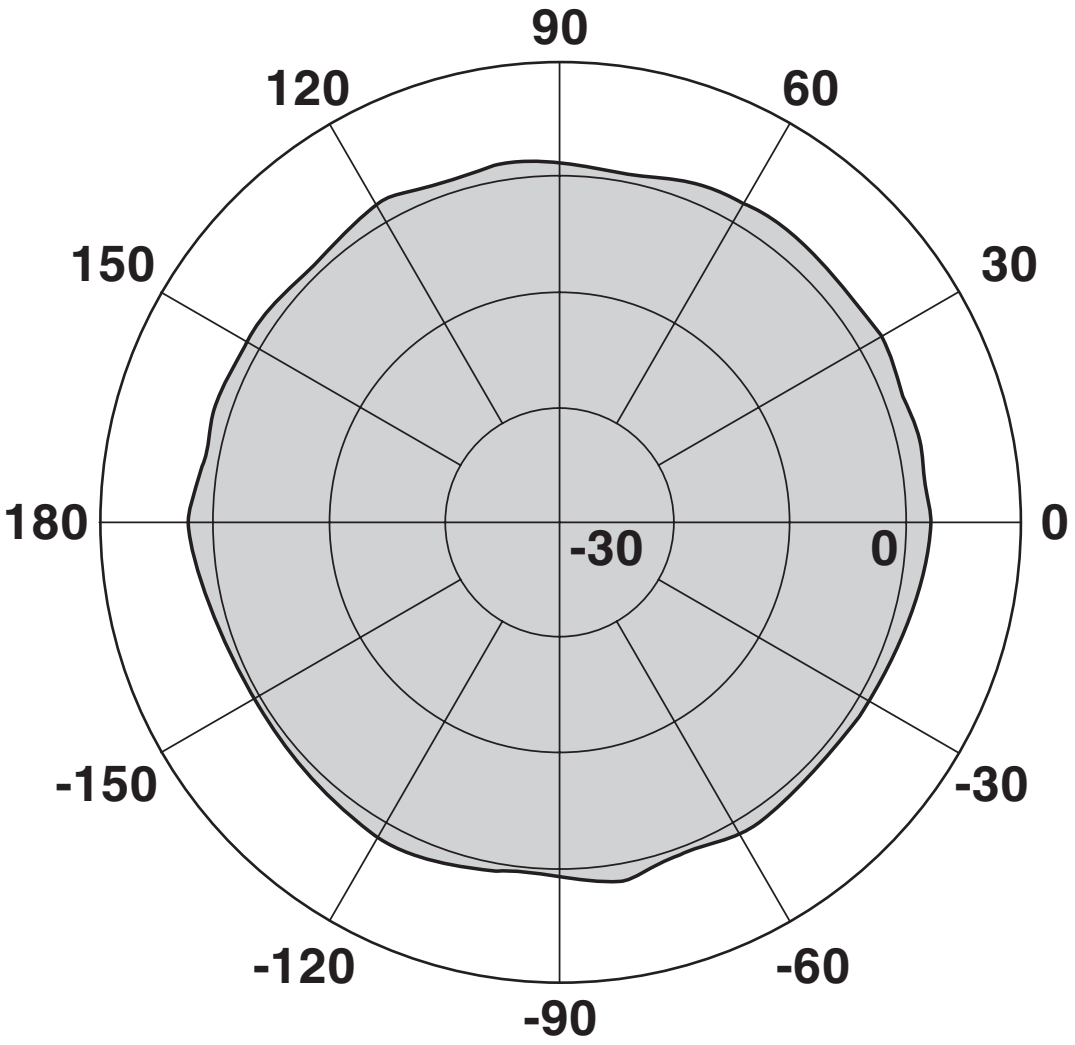

Horizontal

Diagram

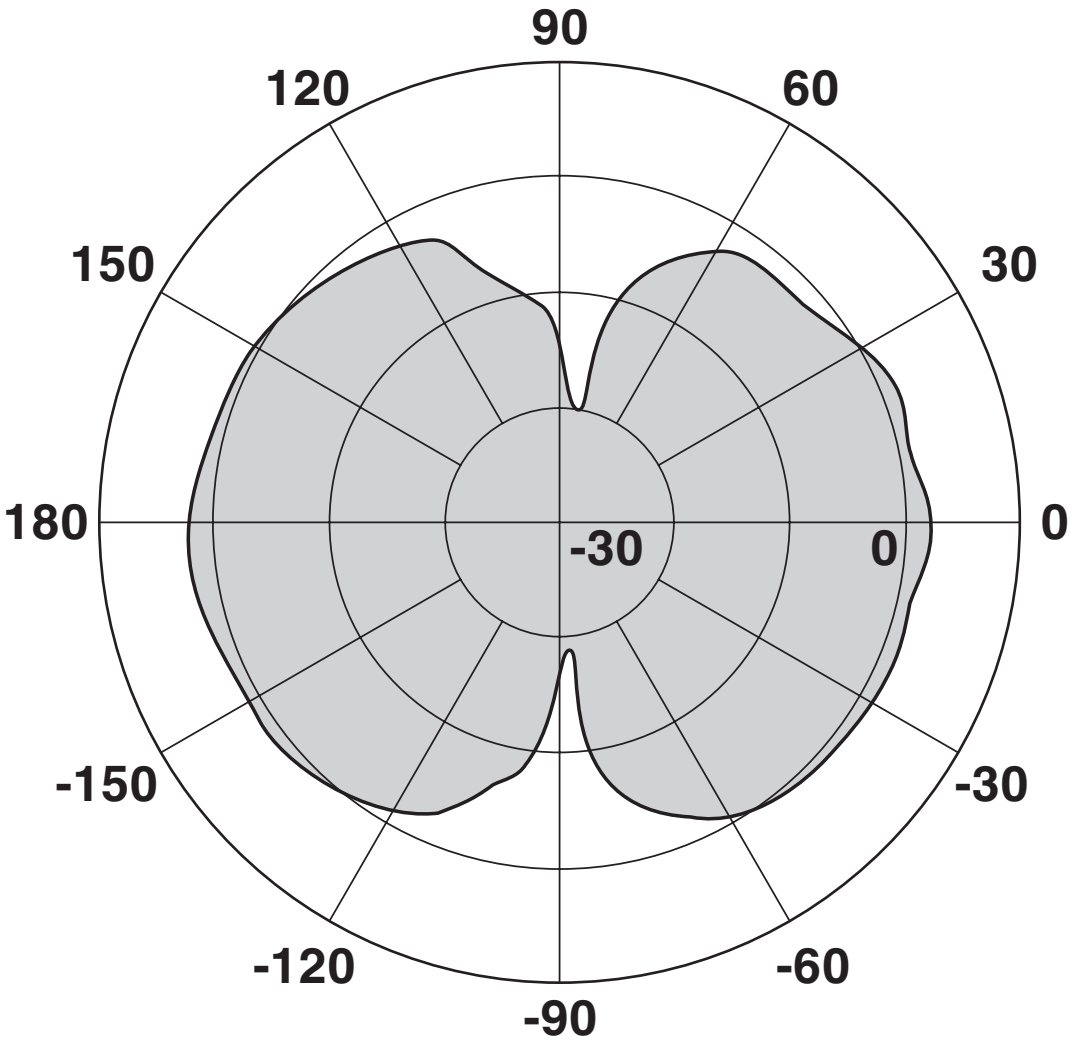

Vertical

Classifications

ECLASS

ECLASS-13.0	19070105
ECLASS-15.0	19070105

ETIM

ETIM 10.0	EC001698

UNSPSC

UNSPSC 21.0	43223100

Environmental product compliance

EU RoHS

Fulfills EU RoHS substance requirements	Yes
Exemption	6(c)

China RoHS

Environment friendly use period (EFUP)	EFUP-25
	An article-related China RoHS declaration table can be found in the download area for the respective article under "Manufacturer declaration". For all articles with EFUP-E, no China RoHS declaration table issued and required.

EU REACH SVHC

REACH candidate substance (CAS No.)	Lead(CAS: 7439-92-1)
SCIP	2dd8bac9-1de0-467b-b35e-76e19d7c0951

EF3.1 Climate Change

CO2e kg	1.239 kg CO2e

Phoenix Contact 2026 © - all rights reserved
https://www.phoenixcontact.com

Phoenix Contact USA
586 Fulling Mill Road
Middletown, PA 17057, United States
(+717) 944-1300
info@phoenixcon.com