RAD-ISM-2400-ANT-VAN-3-0-RSMA - Antenna

2701358

https://www.phoenixcontact.com/us/products/2701358

Please be informed that the data shown in this PDF document is generated from our online catalog. Please find the complete data in the user documentation. Our general terms of use for downloads are valid.



Omnidirectional antenna with protection against vandalism for control cabinet mounting, frequency band: 2.4 GHz, gain: 3 dBi, degree of protection: IP55, shockproof: IK08, connection: RSMA (male), incl. 1.5 m connecting cable

Your advantages

- Ideally suited for freely mobile or stationary 2.4 GHz applications
- Impact-resistant housing (IK08)
- Including 1.5 m connecting cable

Commercial data

Item number	2701358
Packing unit	1 pc
Minimum order quantity	1 pc
Sales key	DN23
Product key	DNN2Z1
GTIN	4046356741750
Weight per piece (including packing)	174.5 g
Weight per piece (excluding packing)	172 g
Customs tariff number	85177100
Country of origin	PL

Technical data

Notes

Note on application

Note on application	Only for industrial use

Product properties

Product type	Antenna
Radiation characteristics	Omnidirectional
Gain	3 dBi
Vertical beamwidth	85 °
Horizontal beamwidth	360 °
Polarization	Linear vertical

Electrical properties

Frequency band	2.4 GHz
Frequency range	2.4 GHz ... 2.5 GHz
Impedance	50 Ω
Maximum capacity	75.00 W
Voltage standing wave ratio VSWR in a 50 Ω system	≤ 1.50

Connection data

Connection technology

Connection method	RSMA (male)

Dimensions

Dimensional drawing	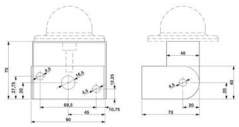
Height	43 mm
Diameter	86 mm

Material specifications

Color	gray white (RAL 9002)
Material	ASA
	Aluminum
Flammability rating according to UL 94	V0
Outer sheath, material	RADOX®(LSFH)

Cable/line

Cable length	1.50 m

Connecting cable	yes
External cable diameter	3.20 mm
Outer sheath, material	RADOX®(LSFH)
Smallest bending radius, fixed installation	5 mm

Environmental and real-life conditions

Ambient conditions

Degree of protection	IP55
Ambient temperature (operation)	-40 °C ... 80 °C
Ambient temperature (storage/transport)	-40 °C ... 80 °C
Wind velocity	12.34568 km/h (Has a force of 10 N)

Mounting

Mounting type	Control cabinet mounting
	Panel mounting
Assembly note	Optional panel mounting
	Outdoors and indoors

Drawings

Dimensional drawing

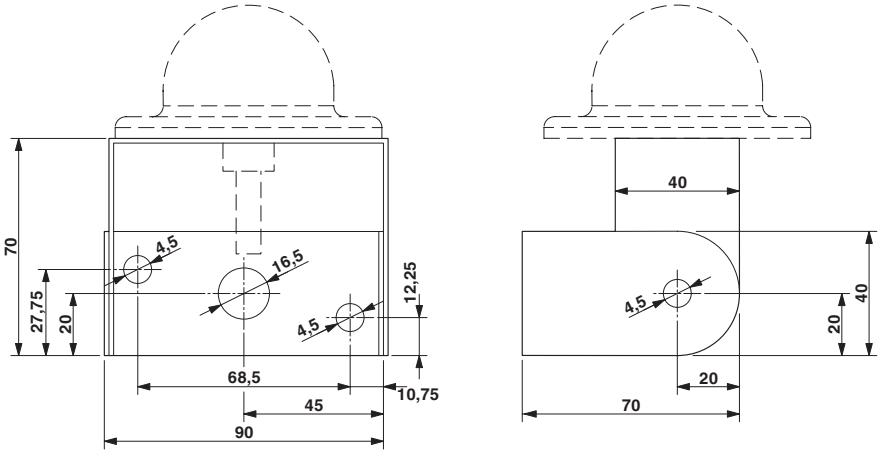

Schematic diagram

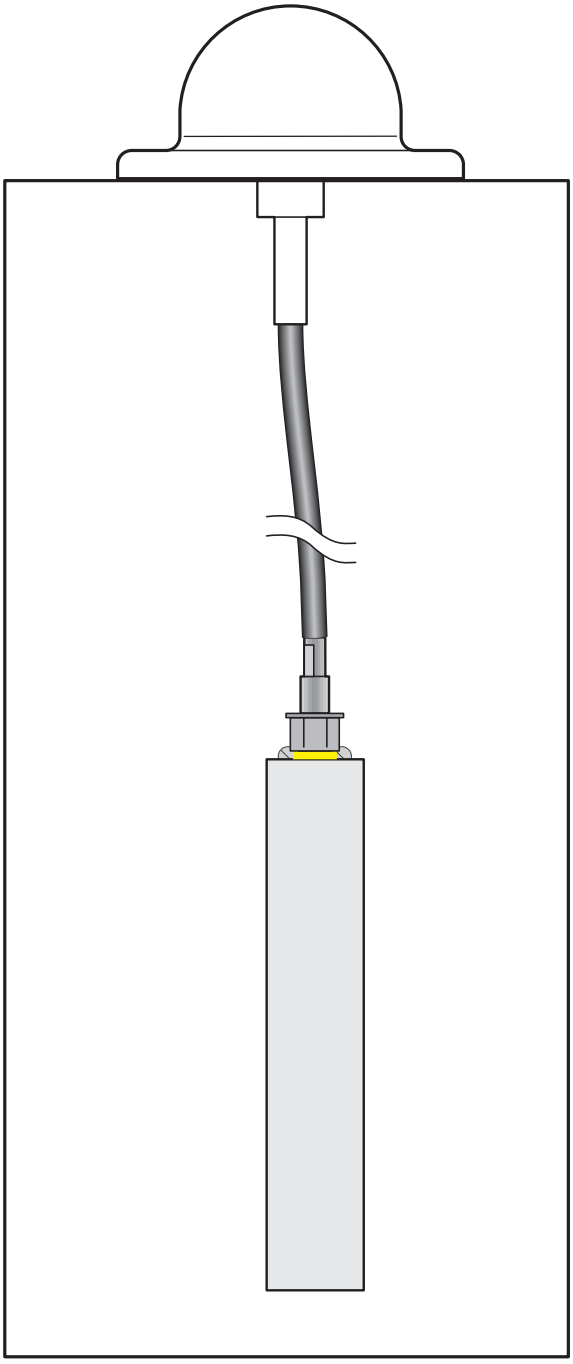

Installation example

Drilling plan/solder pad geometry

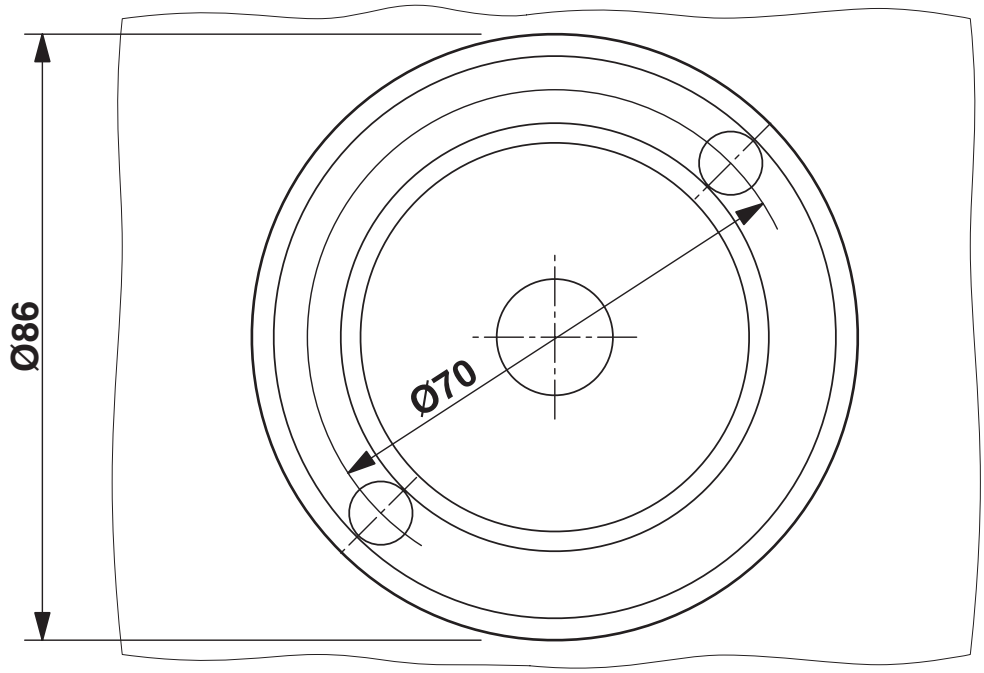

Classifications

ECLASS

ECLASS-13.0	19070105
ECLASS-15.0	19070105

ETIM

ETIM 10.0	EC001698

UNSPSC

UNSPSC 21.0	43223100

Environmental product compliance

EU RoHS

Fulfills EU RoHS substance requirements	Yes
Exemption	6(c)

China RoHS

Environment friendly use period (EFUP)	EFUP-25
	An article-related China RoHS declaration table can be found in the download area for the respective article under "Manufacturer declaration". For all articles with EFUP-E, no China RoHS declaration table issued and required.

EU REACH SVHC

REACH candidate substance (CAS No.)	Lead(CAS: 7439-92-1)
SCIP	0f7ecaaa-0daa-4cfe-8a11-c986ba41a396

EF3.1 Climate Change

CO2e kg	9.717 kg CO2e

Phoenix Contact 2026 © - all rights reserved
https://www.phoenixcontact.com

Phoenix Contact USA
586 Fulling Mill Road
Middletown, PA 17057, United States
(+717) 944-1300
info@phoenixcon.com