AXL F DOR4/2 AC/220DC 1F - Relay module

2700608

https://www.phoenixcontact.com/us/products/2700608

Please be informed that the data shown in this PDF document is generated from our online catalog. Please find the complete data in the user documentation. Our general terms of use for downloads are valid.

CRA-READY



Axioline F, Relay module, Relay outputs: 4 (floating), N/O contact, 220 V DC, 230 V AC, transmission speed in the local bus: 100 Mbps, degree of protection: IP20, including bus base module and Axioline F connectors; The product is being prepared for compliance with the Cyber Resilience Act (CRA).

Product description

The module is designed for use within an Axioline F station. It has four floating relay N/O contacts which are independent of one another. Low-voltage and extra-low-voltage modules can be used side by side within an Axioline F station.

Your advantages

- Meets the requirements of IEC 61850-3 and IEEE 1613
- 4 monostable relays
- Floating connections for 4 actuators
- Nominal current of each output: 8 A
- Total current of the module: 32 A (4 x 8 A)
- Device rating plate stored

ELEKTROGERÄTE RÜCKNAHME

Commercial data

Item number	2700608

Packing unit	1 pc
Minimum order quantity	1 pc
Sales key	DR02
Product key	DRI232
GTIN	4046356916486
Weight per piece (including packing)	255.7 g
Weight per piece (excluding packing)	222 g
Customs tariff number	85389091
Country of origin	DE

Technical data

Dimensions

Dimensional drawing	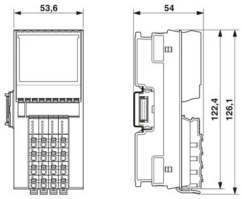
Width	53.6 mm
Height	126.1 mm
Depth	54 mm
Note on dimensions	The depth applies when a TH 35-7.5 DIN rail is used (in accordance with EN 60715).

Notes

Note on application	Only for industrial use
Note on application	As things stand now, we are preparing the product so that, as of December 11, 2027, it will comply with the requirements of the EU Cyber Resilience Act (CRA) based on the information currently available regarding the CRA.

Mounting

Mounting type	DIN rail mounting
Mounting position	any (observe temperature and current derating)

Material specifications

Color (Housing)	gray (RAL 7042)

Interfaces

Axioline F local bus

Number of interfaces	2
Connection method	Bus base module
Transmission speed	100 Mbps

System properties

Programming data

Input address area	0 Byte
Output address area	1 Byte

Fieldbus data telegram (PROFIBUS)

Required parameter data	1 Byte
Required configuration data	6 Byte

Output data

Relay

Number of outputs	4 (floating)
Connection method	Push-in connection
Connection technology	2-conductor
Contact switching type	N/O contact
Contact material	$AgSnO_2$
Nominal output voltage (DC)	220 V DC
Nominal output voltage (AC)	230 V AC
Output voltage range (DC)	24 V DC ... 220 V DC -20 % / +15 %
Output voltage range (AC)	24 V AC ... 230 V AC -20 % / +15 % (50/60 Hz)
Output current (max. per channel)	max. 8 A (per channel, provide an external fuse)
Output current (max. per module)	max. 32 A (per module)
Inrush current	max. 15 A (for 4 s)
	max. 65 A (for 0.02 s)
Switching current	max. 8 A AC (cos phi = 1)
	For DC see load limit curve, e.g., the following values:
	max. 8 A DC (≤ 30 V, ohmic load)
	max. 500 mA DC (110 V, ohmic load)
	max. 250 mA DC (220 V DC, ohmic load)
	max. 220 mA DC (125 V DC, L/R ≤ 50 ms, applications with UL approval)
	max. 110 mA DC (250 V DC, L/R ≤ 50 ms, applications with UL approval)
Switching power	max. 2000 VA
	For DC see load limit curve, e.g., the following values:
	max. 240 W (30 V DC)
	max. 55 W (≥ 60 V DC)
	max. 25 W (125 V DC, 250 V DC, applications with UL approval)
Switching frequency	0.1 Hz (with load)
	20 Hz (without load)
Switching capacity in accordance with IEC 60947-5-1	6 A (120 V (AC15))
	3 A (240 V (AC15))
	0.22 A (125 V (DC13))
	0.1 A (250 V (DC-13))
Switching frequency	max. 6 (per minute)
Typical response time	10 ms
Bouncing time	3 ms
Typical release time	< 5 ms
Service life electrical	100000 switching cycles
Mechanical service life	$10x\ 10^6$ cycles
Common potentials	all contacts floating

Product properties

Product type	I/O component
Product family	Axioline F
Type	block modular
Mounting position	any (observe temperature and current derating)
Scope of supply	including bus base module and Axioline F connectors
Special properties	The product is being prepared for compliance with the Cyber Resilience Act (CRA)

Insulation characteristics

Overvoltage category	III (EN 61010-2-201/UL 61010-2-201), up to 2000 m above sea level II (EN 61010-2-201/UL 61010-2-201), up to 3000 m above sea level
Pollution degree	2

Electrical properties

Maximum power dissipation for nominal condition	1.4 W

Potentials: Axioline F local bus supply (U_{Bus})

Supply voltage	5 V DC (via bus base module)
Current draw	max. 280 mA (all relays pick up)

Electrical isolation/isolation of the voltage ranges

Test voltage: Relay contact / logic	4 kV
	5 kV
Test voltage: Relay contact / functional ground	4 kV
	5 kV
Test voltage: Relay contact/relay contact (open contact)	1 kV, 50 Hz, 1 min
Test voltage: Relay contact/relay contact (adjacent male connectors)	2.5 kV

Connection data

Connection technology

Connection name	Axioline F connector
Note on the connection method	Please observe the information provided on conductor cross-sections in the “Axioline F: system and installation” user manual. When selecting the cables, please note that in the case of a small conductor cross-section and high current, the terminal point temperature may be up to 30 K above the ambient temperature.

Axioline F connector

Connection method	Push-in connection
Note on the connection method	Please observe the information provided on conductor cross-sections in the “Axioline F: system and installation” user manual. When selecting the cables, please note that in the case of a small conductor cross-section and high current, the terminal point temperature may be up to 30 K above the ambient temperature.
Conductor cross-section, rigid	0.2 mm² ... 1.5 mm²

Conductor cross-section, flexible	0.2 mm² ... 1.5 mm²
Conductor cross-section AWG	24 ... 16
Stripping length	8 mm

Environmental and real-life conditions

Ambient conditions

Ambient temperature (operation)	-25 °C ... 60 °C (max. 6 A/channel for panel mounting on horizontal DIN rail; max. 4 A/channel for any mounting position)
	-25 °C ... 50 °C (max. 8 A/channel for panel mounting on horizontal DIN rail; max. 6 A/channel for any mounting position)
	-25 °C ... 40 °C (max. 8 A/channel for any mounting position)
Degree of protection	IP20
Air pressure (operation)	70 kPa ... 106 kPa (up to 3000 m above sea level)
Air pressure (storage/transport)	70 kPa ... 106 kPa (up to 3000 m above sea level)
Ambient temperature (storage/transport)	-40 °C ... 85 °C
Permissible humidity (operation)	5 % ... 95 % (non-condensing)
Permissible humidity (storage/transport)	5 % ... 95 % (non-condensing)

Mechanical test

Vibration resistance in accordance with EN 60068-2-6/IEC 60068-2-6	5g
Shock in accordance with EN 60068-2-27/IEC 60068-2-27	20g (contact interruption) / 5g (contact closure)
Continuous shock in accordance with EN 60068-2-27/IEC 60068-2-27	10g

Standards and regulations

Developed according to standard	Immunity to ESD
	Immunity to EF
	Immunity to burst
	Immunity to surge
	Immunity to conducted interference
Standard designation	Ambient conditions
Standards/specifications	IEC 61850-3

Drawings

Dimensional drawing

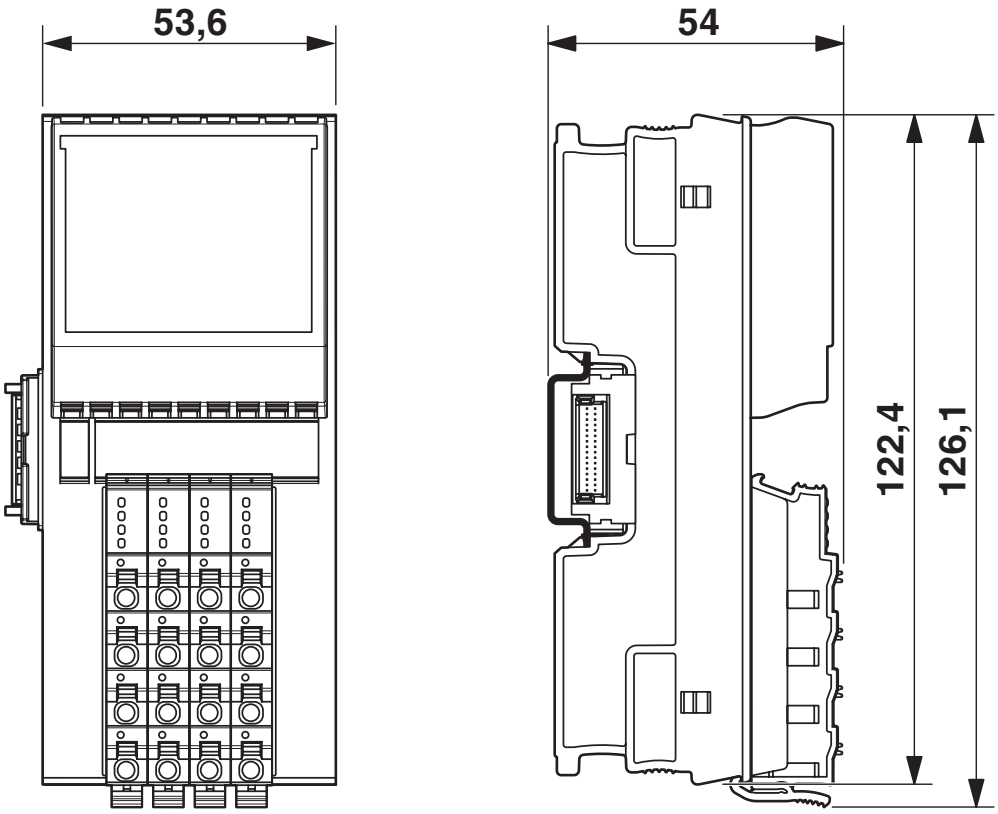

Dimensions

Connection diagram

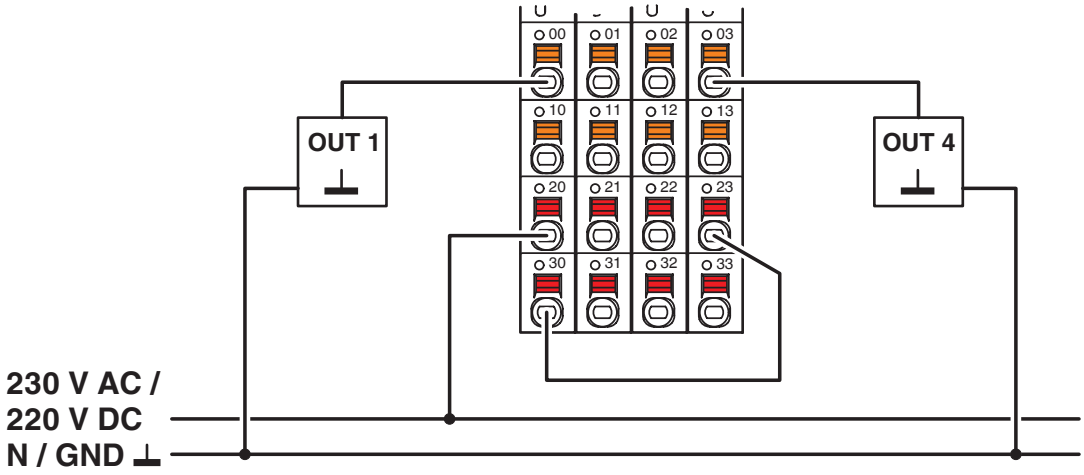

Connection of actuators

Diagram

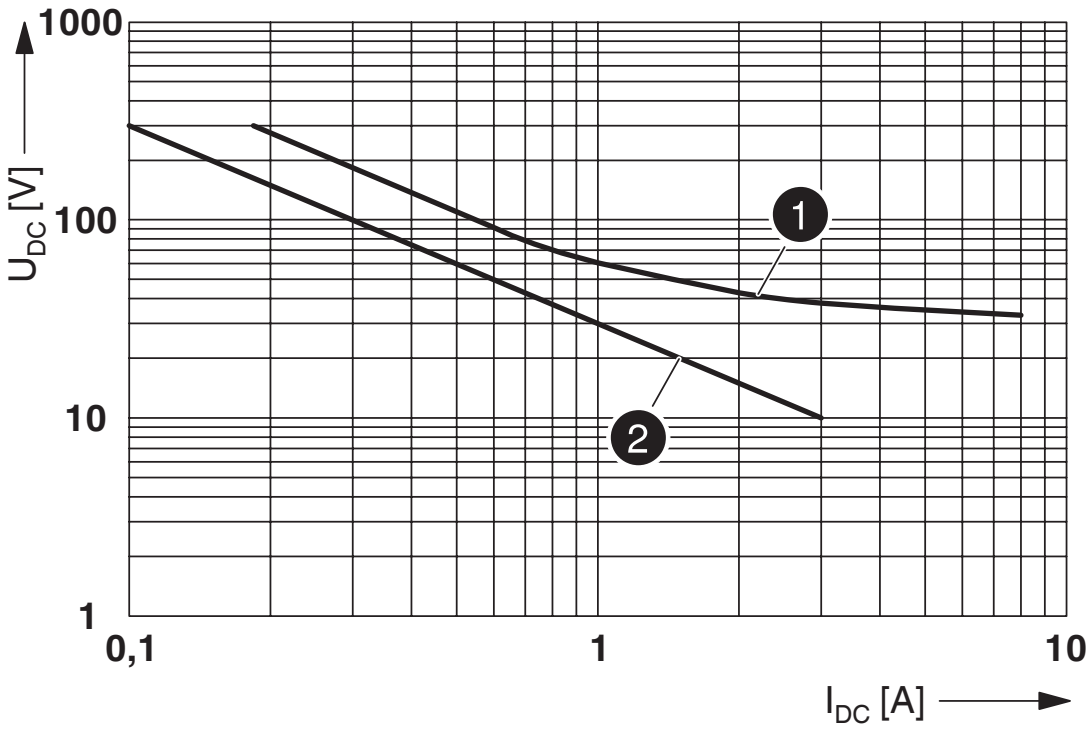

DC load limit curve for REL-MLR-1X1/G 5 (1 - ohmic load, 2 - inductive load L/R = 50 ms)

Block diagram

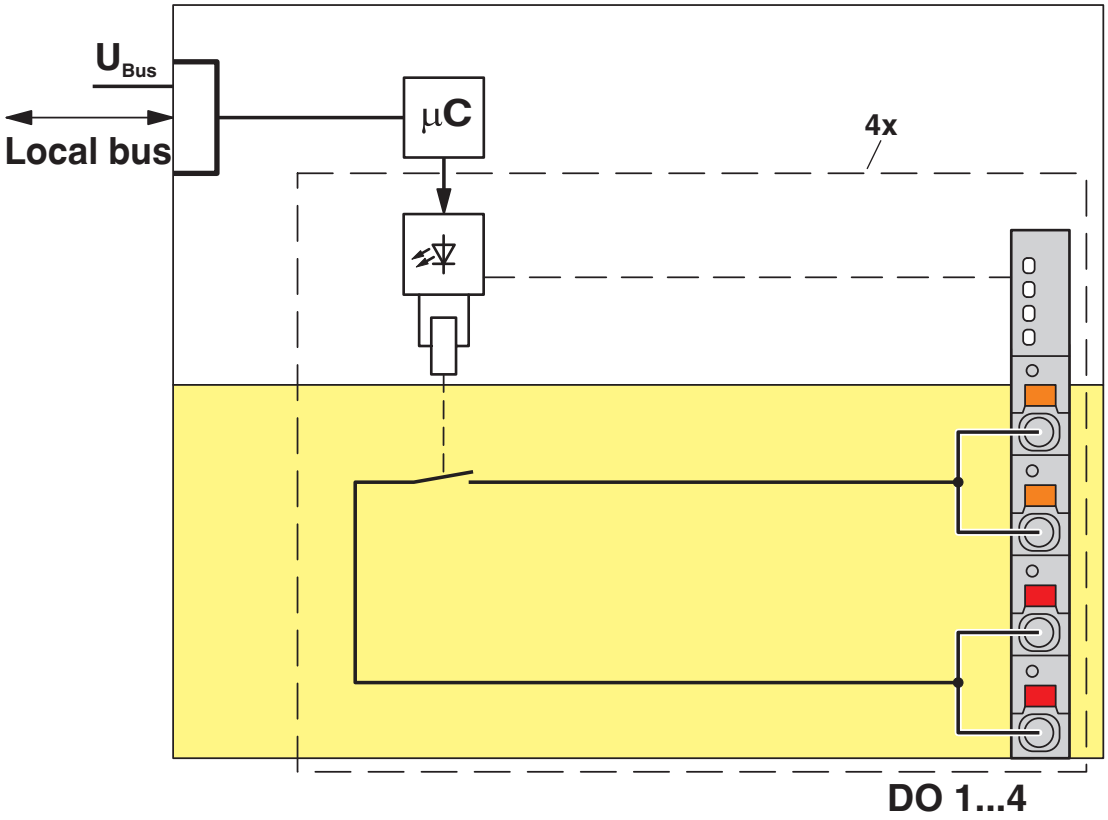

Internal wiring of the terminal points

Approvals

To download certificates, visit the product detail page: https://www.phoenixcontact.com/us/products/2700608

cULus Listed
Approval ID: E238705

Classifications

ECLASS

ECLASS-13.0	27242604
ECLASS-15.0	27242604

ETIM

ETIM 10.0	EC001599

UNSPSC

UNSPSC 21.0	32151600

Environmental product compliance

EU RoHS

Fulfills EU RoHS substance requirements	Yes
Exemption	7(c)-I

China RoHS

Environment friendly use period (EFUP)	EFUP-50
	An article-related China RoHS declaration table can be found in the download area for the respective article under "Manufacturer declaration". For all articles with EFUP-E, no China RoHS declaration table issued and required.

EU REACH SVHC

REACH candidate substance (CAS No.)	No substance above 0.1 wt%

Phoenix Contact 2026 © - all rights reserved
https://www.phoenixcontact.com

Phoenix Contact USA
586 Fulling Mill Road
Middletown, PA 17057, United States
(+717) 944-1300
info@phoenixcon.com