PSR-PS40-1NO-1DO-24DC-SC - Coupling relay

2700398

https://www.phoenixcontact.com/us/products/2700398

Please be informed that the data shown in this PDF document is generated from our online catalog. Please find the complete data in the user documentation. Our general terms of use for downloads are valid.



Coupling relay for SIL 3 high- and low-demand applications, couples digital output signals to the I/O, 1 enabling current path, 1 digital signal output, safe state off applications, test pulse filter, fixed screw terminal block

Your advantages

- Up to SIL 3 in accordance with IEC 61508
- Force-guided contacts in accordance with EN 50205
- Easy proof test according to IEC 61508 thanks to integrated signal contact
- Approved for Class I, Zone 2 applications
- Low housing width of just 6.8 mm
- Long service life thanks to filtering of controller test pulses
- 1 enabling current path, 1 digital signal output
- Couples digital output signals from failsafe controllers to I/O devices (valves, etc.) for electrical isolation and power adaptation
- Corrosion protection through protective coating on the PCB
- Self-regulation with device-internal lock
- Manually monitored and automatic activation in a single device

ELEKTROGERÄTE RÜCKNAHME

Commercial data

Item number	2700398
Packing unit	1 pc
Minimum order quantity	1 pc
Sales key	DN01
Product key	DNA172
GTIN	4046356912884

Weight per piece (including packing)	84.16 g
Weight per piece (excluding packing)	69.5 g
Customs tariff number	85364900
Country of origin	DE

Technical data

Notes

Note on application

Note on application	Only for industrial use

Product properties

Product type	Coupling relay
Product family	PSRmini
Application	Safe switch off
	High demand
	Low demand
	Ex
Control	1-channel
Relay type	Electromechanical relay with force-guided contacts in accordance with IEC/EN 61810-3

Insulation characteristics

Overvoltage category	III
Degree of pollution	2

Times

Typ. starting time with U_s	< 200 ms (when controlled via A1, automatic start)
Typical release time	< 35 ms (when controlled via A1)
Recovery time	500 ms

Electrical properties

Maximum power dissipation for nominal condition	3.25 W (I_L ² = 36 A²)
Nominal operating mode	100% operating factor
Rated insulation voltage	250 V AC
Rated surge voltage/insulation	Safe isolation, reinforced insulation 6 kV from control circuit, start circuit, signal output to the enabling current path; 4 kV / basic insulation between all current paths and housing

Supply

Designation	A1/A2
Rated control circuit supply voltage U_S	20.4 V DC ... 26.4 V DC
Rated control circuit supply voltage U_S	24 V DC -15 % / +10 %
Rated control supply current I_S	typ. 50 mA (depending on load M1 +100 mA)
Power consumption at U_S	typ. 1.2 W
Inrush current	typ. 400 mA (Δt < 10 µs at U_s)
Filter time	max. 2 ms (at A1-A2; test pulse width)
	≥ 100 ms (at A1-A2; test pulse rate)
Protective circuit	Serial protection against polarity reversal; Suppressor diode 33 V

Input data

Digital: Start circuit (Y1, Y2)

Number of inputs	2 (non-safety-related)
Inrush current	< 10 mA
Max. permissible overall conductor resistance	150 Ω
Voltage at input/start and feedback circuit	24 V DC -15 % / +10 %
Current consumption	< 5 mA

Output data

Relay: Enabling current path (13/14)

Output description	2 N/O contacts in series, without delay, floating
Number of outputs	1 (safety-related)
Contact switching type	1 enabling current path
Contact material	$AgSnO_2$
Switching voltage	min. 12 V AC/DC
	max. 250 V AC/DC
Switching power	min. 60 mW
Inrush current	min. 3 mA
	max. 6 A
Switching capacity	4 A (24 V (DC13))
	5 A (250 V (AC15))
Limiting continuous current	6 A (High demand)
	4 A (Low demand)
Sq. Total current	36 A^2 (observe derating)
Switching frequency	max. 0.1 Hz
Mechanical service life	10x 10^6 cycles
Output fuse	6 A gL/gG
	4 A gL/gG (for low-demand applications)

Signal: M1

Output description	PNP
Number of outputs	1 (non-safety-related)
Voltage	approx. 22 V DC (U_s - 2 V)
Current	max. 100 mA
Maximum inrush current	500 mA (Δt = 1 ms at U_s)
Short-circuit protection	no
Output fuse	150 mA fast blow

Connection data

Connection technology

pluggable	no

Conductor connection

Connection method	Screw connection
Conductor cross-section rigid	0.2 mm² ... 2.5 mm²
Conductor cross-section flexible	0.2 mm² ... 2.5 mm²
Conductor cross-section AWG	26 ... 12
Stripping length	12 mm
Screw thread	M3
Tightening torque	0.5 Nm ... 0.6 Nm

Signaling

Status display	2 x LED (green)
Operating voltage display	1 x LED (yellow)
Error indication	1 x LED (red)

Dimensions

Width	6.8 mm
Height	93.1 mm
Depth	102.5 mm

Material specifications

Color (Housing)	yellow (RAL 1018)
Housing material	PBT

Characteristics

Safety data

Stop category (EN 60204-1)	0

Safety data: EN 50156

Safety Integrity Level (SIL)	3

Safety data: IEC 61508 - High demand

Safety Integrity Level (SIL)	3

Safety data: IEC 61508 - Low demand

Safety Integrity Level (SIL)	3

Environmental and real-life conditions

Ambient conditions

Degree of protection	IP20
Min. degree of protection of inst. location	IP54
Ambient temperature (operation)	-40 °C ... 70 °C (observe derating)
Ambient temperature (storage/transport)	-40 °C ... 85 °C
Maximum altitude	≤ 2000 m (Above sea level)
Max. permissible humidity (storage/transport)	75 % (on average, 85% infrequently, non-condensing)
Max. permissible relative humidity (operation)	75 % (on average, 85% infrequently, non-condensing)
Shock	15g

Vibration (operation)	10 Hz ... 150 Hz, 2g

Approvals

ATEX

Identification	Ⓔx II 3G Ex ec nC IIC T4 Gc
Certificate	UL 22 ATEX 2912X

IECEx

Identification	Ex ec nC IIC T4 Gc
Certificate	IECEx UL 22.0037X

UL, USA/Canada

Identification	cULus
Certificate	E140324

UL Ex, USA / Canada

Identification	Class I, Zone 2, AEx ec nC IIC T4 / Ex ec nC IIC Gc T4 X
	Class I, Div. 2, Groups A, B, C, D, T4
Certificate	E360692

CE

Identification	CE-compliant

Environmental simulation test

Identification	G3
Certificate	ISA-S71.04

CCC / China-Ex

Identification	Ex ec nC IIC T4 Gc
Certificate	2022122304115695

DNV

Identification	C, EMC2
Certificate	11253-14 HH

Mounting

Mounting type	DIN rail mounting
Assembly note	See derating curve
Mounting position	vertical, horizontal, with front of module upward

Drawings

Circuit diagram

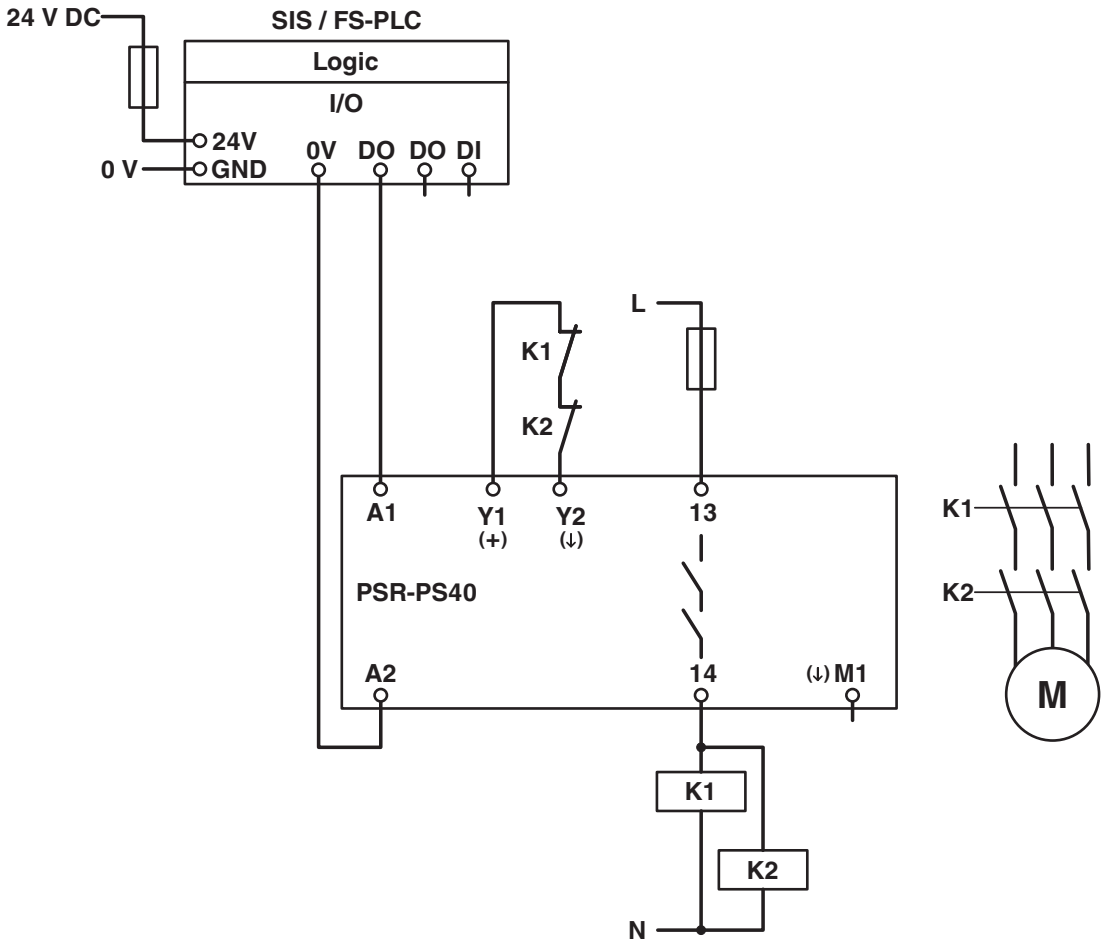

Example application

Block diagram

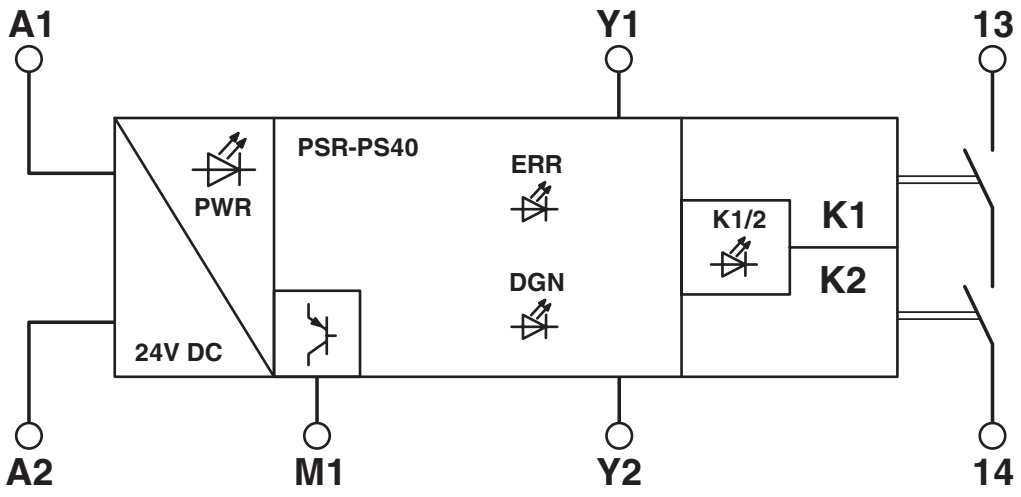

Block diagram

Approvals

To download certificates, visit the product detail page: https://www.phoenixcontact.com/us/products/2700398

Functional Safety
Approval ID: 44 780 13755203

Functional Safety
Approval ID: 44 205 13755205

cULus Listed
Approval ID: E140324

DNV GL
Approval ID: TAA00002VZ

IECEx
Approval ID: IECEx ULD 22.0037X

ATEX
Approval ID: UL 22 ATEX 2912X

cULus Listed
Approval ID: E360692

CCC
Approval ID: 2022122304115695

Classifications

ECLASS

ECLASS-13.0	27371819
ECLASS-15.0	27371819

ETIM

ETIM 10.0	EC001449

UNSPSC

UNSPSC 21.0	39122200

Environmental product compliance

EU RoHS

Fulfills EU RoHS substance requirements	Yes
Exemption	7(a), 7(c)-I

China RoHS

Environment friendly use period (EFUP)	EFUP-50
	An article-related China RoHS declaration table can be found in the download area for the respective article under "Manufacturer declaration". For all articles with EFUP-E, no China RoHS declaration table issued and required.

EU REACH SVHC

REACH candidate substance (CAS No.)	Lead(CAS: 7439-92-1)
SCIP	abeab941-5120-46d0-b9fe-55b65c45593c

Phoenix Contact 2026 © - all rights reserved
https://www.phoenixcontact.com

Phoenix Contact USA
586 Fulling Mill Road
Middletown, PA 17057, United States
(+717) 944-1300
info@phoenixcon.com