IB IL IFS-MA-PAC - Communication module

2692720

https://www.phoenixcontact.com/us/products/2692720

Please be informed that the data shown in this PDF document is generated from our online catalog. Please find the complete data in the user documentation. Our general terms of use for downloads are valid.

CRA-READY

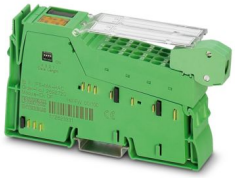

Inline system bus master, for connecting the interface system bus, complete with accessories (connector and marking field)

Product description

The terminal is designed for use within an Inline station. It can be used to connect INTERFACE modules to the Inline station and thus the bus system used via the INTERFACE system bus.

Your advantages

- Acquisition and output of up to 31 measured values and 16 manipulated variables
- Easy integration of up to 8 INTERFACE EMM and EEM modules with firmware 1.03 or later
- User-friendly parameterization, configuration, and diagnostics using DTMs (Device Type Managers)
- Serial interface (S port) including a memory stick for saving the configuration

ELEKTROGERÄTE RÜCKNAHME

Commercial data

Item number	2692720
Packing unit	1 pc
Minimum order quantity	1 pc

Sales key	DR01
Product key	DRI153
GTIN	4046356448932
Weight per piece (including packing)	160.4 g
Weight per piece (excluding packing)	170.3 g
Customs tariff number	85371091
Country of origin	DE

Technical data

Dimensions

Dimensional drawing	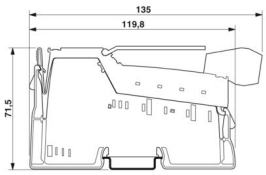
Width	24.4 mm
Height	135 mm
Depth	71.5 mm

Notes

Note on application	Only for industrial use
Note on application	As things stand now, we are preparing the product so that, as of December 11, 2027, it will comply with the requirements of the EU Cyber Resilience Act (CRA) based on the information currently available regarding the CRA.

Mounting

Mounting type	DIN rail mounting

Material specifications

Color (Housing)	green (RAL 6021)

Interfaces

Inline local bus

Connection method	Bus base module
Transmission speed	500 kbps

INTERFACE system bus

Connection method	Inline shield connector
Transmission physics	Single wire
No. of channels	1
Protocols supported	CAN

Programming interface (S port)

Connection method	IFS-USB-PROG-ADAPTER
No. of channels	1
Protocols supported	Serial

System properties

Local diagnostics

Error messages via the bus	9 V power supply faulty
	Group error message, INTERFACE system bus error

Programming data

Length code (hex)	1E
ID code (dec.)	220
Length code (dec)	30
Process data channel	max. 60 Byte (variable)
Input address area	max. 60 Byte
Output address area	max. 60 Byte
Parameter channel (PCP)	max. 4 Byte
Register length (bus)	max. 64 Byte

Fieldbus data telegram (PROFIBUS)

Required parameter data	1 Byte
Required configuration data	5 Byte

Product properties

Product type	I/O component
Product family	Inline
Type	modular
Operating mode	Process data mode with up to 31 words; PCP with 1, 2, or 4 words
Special properties	The product is being prepared for compliance with the Cyber Resilience Act (CRA)

Insulation characteristics

Overvoltage category	II (IEC 60664-1, EN 60664-1)
Pollution degree	2 (IEC 60664-1, EN 60664-1)

Electrical properties

Maximum power dissipation for nominal condition	1.25 W
Power dissipation	1.285 W (Module)

Potentials: Communications power (U_L)

Supply voltage	7.5 V DC (via voltage jumper)
Current draw	max. 78 mA
	typ. 66 mA

Potentials: Main circuit supply (U_M)

Supply voltage	24 V DC (via voltage jumper)
Supply voltage range	19.2 V DC ... 30 V DC
Current draw	max. 300 mA
	typ. 141 mA

Electrical isolation/isolation of the voltage ranges

Test voltage: 24 V supply U_M, bus, logic/INTERFACE interface	500 V AC, 50 Hz, 1 min

Test voltage: 24 V supply U_M, bus, logic/functional ground	500 V AC, 50 Hz, 1 min
Test voltage: INTERFACE interface/functional ground	500 V AC, 50 Hz, 1 min

Connection data

Connection technology

Connection name	Inline connector

Inline connector

Connection method	Spring-cage connection
Conductor cross-section, rigid	0.08 mm² ... 1.5 mm²
Conductor cross-section, flexible	0.08 mm² ... 1.5 mm²
Conductor cross-section AWG	28 ... 16
Stripping length	8 mm

Environmental and real-life conditions

Ambient conditions

Ambient temperature (operation)	-25 °C ... 55 °C
Degree of protection	IP20
Air pressure (operation)	70 kPa ... 106 kPa (up to 3000 m above sea level)
Air pressure (storage/transport)	70 kPa ... 106 kPa (up to 3000 m above sea level)
Ambient temperature (storage/transport)	-25 °C ... 85 °C
Permissible humidity (operation)	10 % ... 95 % (non-condensing)
Permissible humidity (storage/transport)	10 % ... 95 % (non-condensing)

Mechanical test

Vibration resistance in accordance with EN 60068-2-6/IEC 60068-2-6	5g
Shock in accordance with EN 60068-2-27/IEC 60068-2-27	25g

Standards and regulations

Protection class	III (IEC 61140, EN 61140, VDE 0140-1)

Drawings

Dimensional drawing

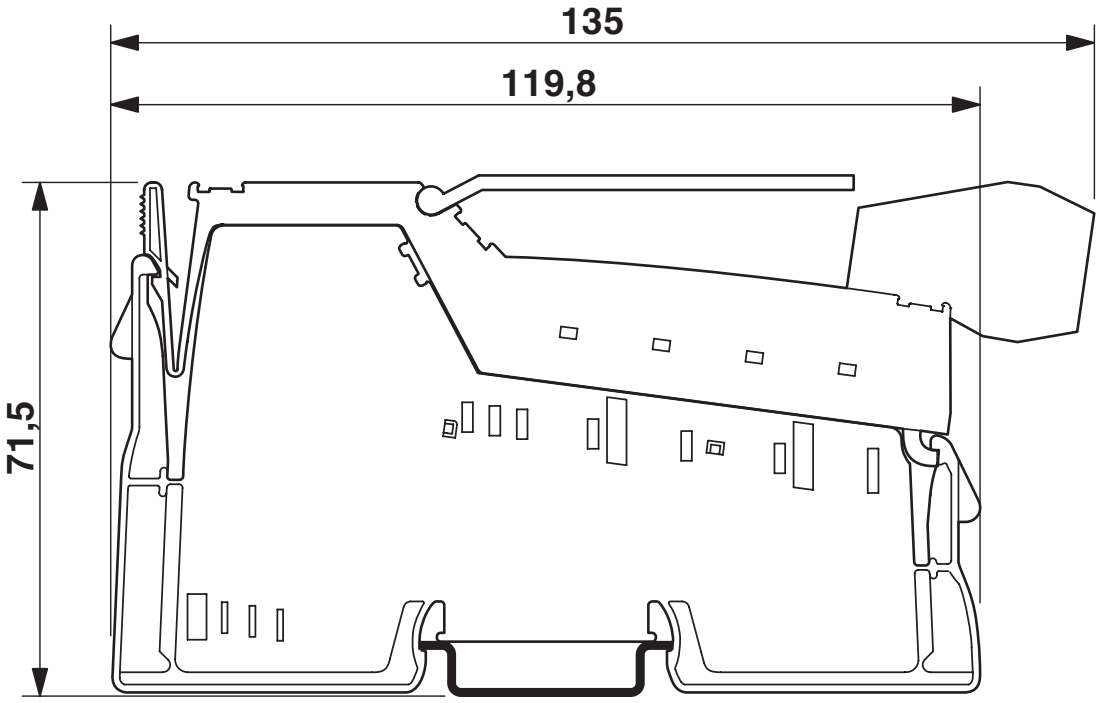

Connection diagram

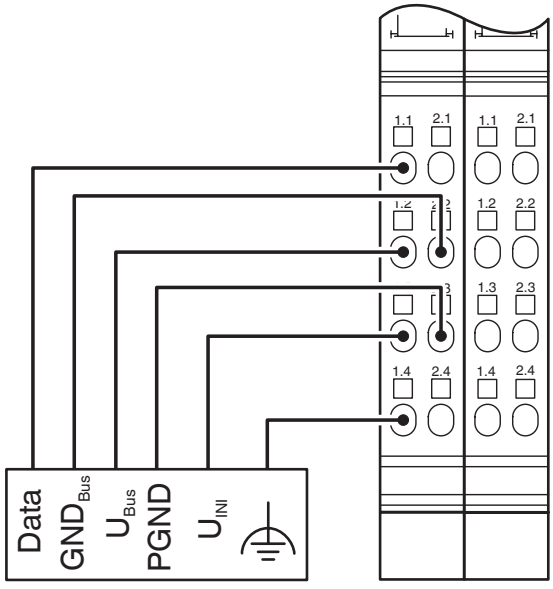

Approvals

To download certificates, visit the product detail page: https://www.phoenixcontact.com/us/products/2692720

cULus Listed
Approval ID: E140324

Classifications

ECLASS

ECLASS-13.0	27242608
ECLASS-15.0	27242608

ETIM

ETIM 10.0	EC001604

UNSPSC

UNSPSC 21.0	32151600

Environmental product compliance

EU RoHS

Fulfills EU RoHS substance requirements	Yes
Exemption	7(a), 7(c)-I

China RoHS

Environment friendly use period (EFUP)	EFUP-50
	An article-related China RoHS declaration table can be found in the download area for the respective article under "Manufacturer declaration". For all articles with EFUP-E, no China RoHS declaration table issued and required.

EU REACH SVHC

REACH candidate substance (CAS No.)	Lead(CAS: 7439-92-1)
SCIP	54cbd787-e76c-471c-9d8b-c87e12e08cdc

EF3.1 Climate Change

CO2e kg	8.561 kg CO2e

Phoenix Contact 2026 © - all rights reserved
https://www.phoenixcontact.com

Phoenix Contact USA
586 Fulling Mill Road
Middletown, PA 17057, United States
(+717) 944-1300
info@phoenixcon.com